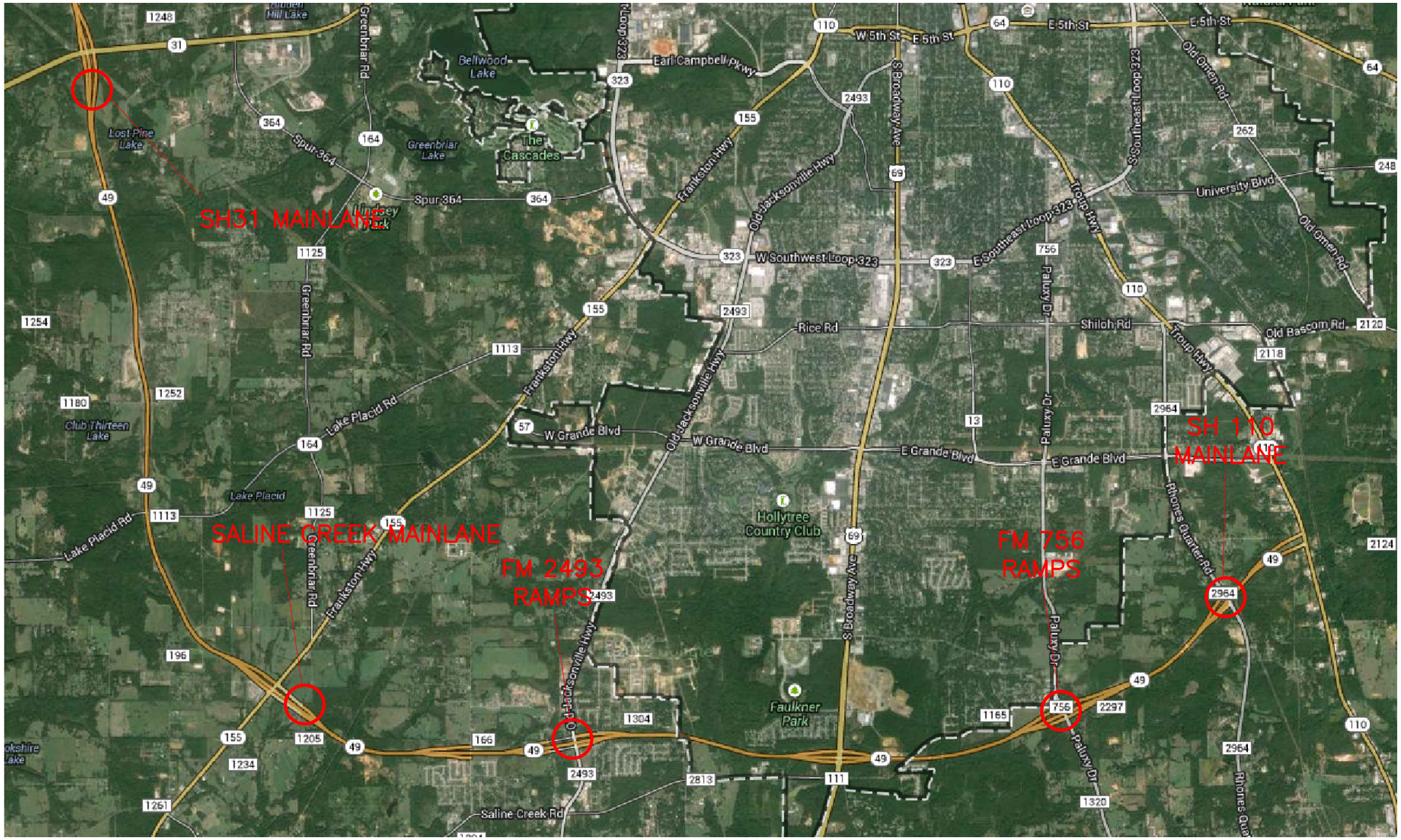

NETRMA
RETROFIT
TOLLING DESIGN
SCHNEIDER ELECTRIC

PRELIMINARY / DRAFT

FOR REVIEW ONLY. NOT FOR BUILD OR DESIGN WITHOUT APPROVAL BY AUTHORIZED REPRESENTATIVE OF SCHNEIDER ELECTRIC.

DATE	DESCRIPTION	REV.

SCHNEIDER ELECTRIC
211 E SEVENTH STREET, SUITE 800, AUSTIN, TEXAS 78701

NETRMA
RETROFIT
COVER PAGE
TOLLING DESIGN

DATE: 02/26/2014 SHEET 1 OF 33 SHEETS

DESIGNED BY: T. HAMMOND
DRAWN BY: T. HAMMOND
CHECKED BY:

CONFIDENTIAL: THIS DOCUMENT AND THE INFORMATION CONTAINED IN IT ARE CONFIDENTIAL AND CANNOT BE COPIED OR DISCLOSED IN WHOLE OR IN PART WITHOUT THE EXPRESS WRITTEN CONSENT OF **SCHNEIDER ELECTRIC.**

INDEX

SHEET	NAME
1	COVER PAGE
2	INDEX – KEY
3	TOLLING EQUPMENT ELEVATION DETAILS
4	MAINLANE ZONE PLAN & PROFILE LAYOUT (CRIT. DIM.)
5	RAMP ZONE PLAN & PROFILE LAYOUT (CRIT. DIM.)
6	MAINLANE ZONE ELEVATION DETAILS
7	RAMP ZONE ELEVATION DETAILS
8	MAINLANE TOLL PAD DETAILS
9	RAMP TOLL PAD DETAILS
10	EQUIPMENT MOUNT DETAILS
11	EQUIPMENT CABINET DETAILS
12	POWER BLOCK DIAGRAM
13	NETWORK BLOCK DIAGRAM
14	POWER SCHEMATIC
15	NETWORK DEVICE LIST
16	MAINLANE POWER AND I/O PANEL
17	RAMP POWER AND I/O PANEL
18	POWER WIRING DETAILS
19	POWER RELAY WIRING DETAILS
20	TREADLE INSTALL DETAILS
21	TREADLE WIRING DETAILS
22	LOOP INSTALL DETAILS
23	LOOP WIRING DETAILS
24	VES CAMERA/STROBE MOUNT DETAILS
25	VES CAMERA/STROBE WIRING DETAILS
26	AVC SCANNER MOUNT DETAILS
27	AVC SCANNER WIRING DETAILS
28	AVI ANTENNA MOUNT DETAILS
29	AVI ANTENNA WIRING DETAILS
30	DVAS CAMERA MOUNT DETAILS
31	DVAS CAMERA WIRING DETAILS
32	VES LIGHT SNESOR MOUNT DETAILS
33	VES LIGHT SENSOR WIRING DETAILS

PRELIMINARY / DRAFT

FOR REVIEW ONLY. NOT FOR BUILD OR DESIGN WITHOUT APPROVAL BY AUTHORIZED REPRESENTATIVE OF SCHNEIDER ELECTRIC.

DATE	DESCRIPTION	REV.

SCHNEIDER ELECTRIC
211 E SEVENTH STREET, SUITE 800, AUSTIN, TEXAS 78701

NETRMA
RETROFIT
INDEX

DATE: 02/26/2014

DESIGNED BY: T. HAMMOND
DRAWN BY: T. HAMMOND
CHECKED BY:

CONFIDENTIAL: THIS DOCUMENT AND THE INFORMATION CONTAINED IN IT ARE CONFIDENTIAL AND CANNOT BE COPIED OR DISCLOSED IN WHOLE OR IN PART WITHOUT THE EXPRESS WRITTEN CONSENT OF **SCHNEIDER ELECTRIC.**

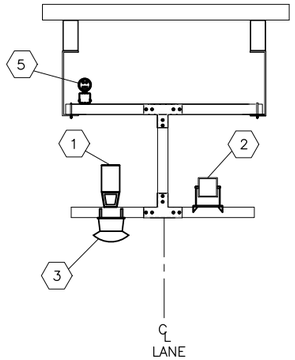

ELEVATION
SHOULDER – ENTRY/EXIT
TYPE (A1)

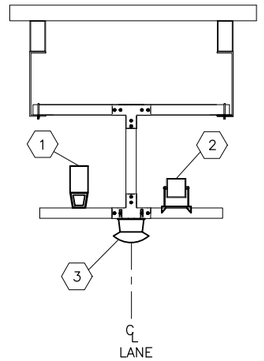

ELEVATION
TRAVEL LANE – ENTRY
TYPE (B1)

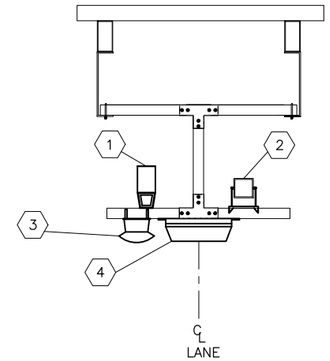

ELEVATION
TRAVEL LANE – EXIT
TYPE (B2)

NOTES:

1. COMPONENT LOCATIONS ARE TYPICAL AND SUBJECT TO CHANGE DUE TO SITE SURVEYS, GANTRY LOCATIONS AND HANGER DESIGN.
2. WEIGHTS LISTED DO NOT TAKE CABLE OR CONDUIT INTO ACCOUNT.
3. SEE EQUIPMENT MOUNT DETAIL SHEET FOR MOUNTING DETAILS.

EQUIPMENT WEIGHTS ENTRY GANTRY

ITEM # ⬡	COMPONENT	MODEL, PART NUMBER	COMP. WEIGHT (lbs.)	BRACKET WEIGHT (lbs.)	SHOULDER LANE QTY. ENTRY GANTRY	SHOULDER COMPONENT WEIGHT (lbs.) ENTRY GANTRY	TRAVEL LANE QTY. ENTRY GANTRY	TRAVEL LANE COMPONENT WEIGHT (lbs.) ENTRY GANTRY
1	VES CAMERA	VISCAM 400	21.7	3.2	1	24.9	2	49.8
2	VES STROBE	JAI TNL–50, 3105651	9.1	5.4	1	14.5	1	14.5
3	AVC LASER SCANNER	SICK LMS511, 1046135	8.2	5.4	0	0.0	1	13.6
4	AVI ANTENNA	TRANSCORE UTA	26	N/A	0	0.0	0	0.0
5	DVAS CAMERA	BASLER BIP2–2500C–DN	15.7	5.4	1	21.1	0	0.0
TOTAL COMPONENT WEIGHT PER SHOULDER (lbs.) ENTRY GANTRY						60.5		
TOTAL COMPONENT WEIGHT PER TRAVEL LANE (lbs.) ENTRY GANTRY								77.9

EQUIPMENT WEIGHTS EXIT GANTRY

ITEM # ⬡	COMPONENT	MODEL, PART NUMBER	COMP. WEIGHT (lbs.)	BRACKET WEIGHT (lbs.)	SHOULDER LANE QTY. EXIT GANTRY	SHOULDER COMPONENT WEIGHT (lbs.) EXIT GANTRY	TRAVEL LANE QTY. EXIT GANTRY	TRAVEL LANE COMPONENT WEIGHT (lbs.) EXIT GANTRY
1	VES CAMERA	JAI VISCAM 400	21.7	3.2	1	24.9	2	49.8
2	VES STROBE	JAI TNL–50, 3105651	9.1	5.4	1	14.5	1	14.5
3	AVC LASER SCANNER	SICK LMS511, 1046135	8.2	5.4	0	0.0	1	13.6
4	AVI ANTENNA	TRANSCORE UTA	26	N/A	0	0.0	1	26
5	DVAS CAMERA	BASLER BIP2–2500C–DN	15.7	5.4	1	21.1	0	0.0
TOTAL COMPONENT WEIGHT PER SHOULDER (lbs.) EXIT GANTRY						60.5		
TOTAL COMPONENT WEIGHT PER TRAVEL LANE (lbs.) EXIT GANTRY								103.9

PRELIMINARY / DRAFT

FOR REVIEW ONLY. NOT FOR BUILD OR DESIGN WITHOUT APPROVAL BY AUTHORIZED REPRESENTATIVE OF SCHNEIDER ELECTRIC.

DATE	DESCRIPTION	REV.
3/5/2014	ADDED DVAS CAMERAS	1

SCHNEIDER ELECTRIC
211 E SEVENTH STREET, SUITE 800, AUSTIN, TEXAS 78701

NETRMA
RETROFIT TOLLING EQUIPMENT ELEVATION DETAILS (TYP)

DATE: 02/26/2014 SHEET 3 OF 33 SHEETS

DESIGNED BY: T. HAMMOND
DRAWN BY: T. HAMMOND
CHECKED BY:

CONFIDENTIAL: THIS DOCUMENT AND THE INFORMATION CONTAINED IN IT ARE CONFIDENTIAL AND CANNOT BE COPIED OR DISCLOSED IN WHOLE OR IN PART WITHOUT THE EXPRESS WRITTEN CONSENT OF **SCHNEIDER ELECTRIC.**

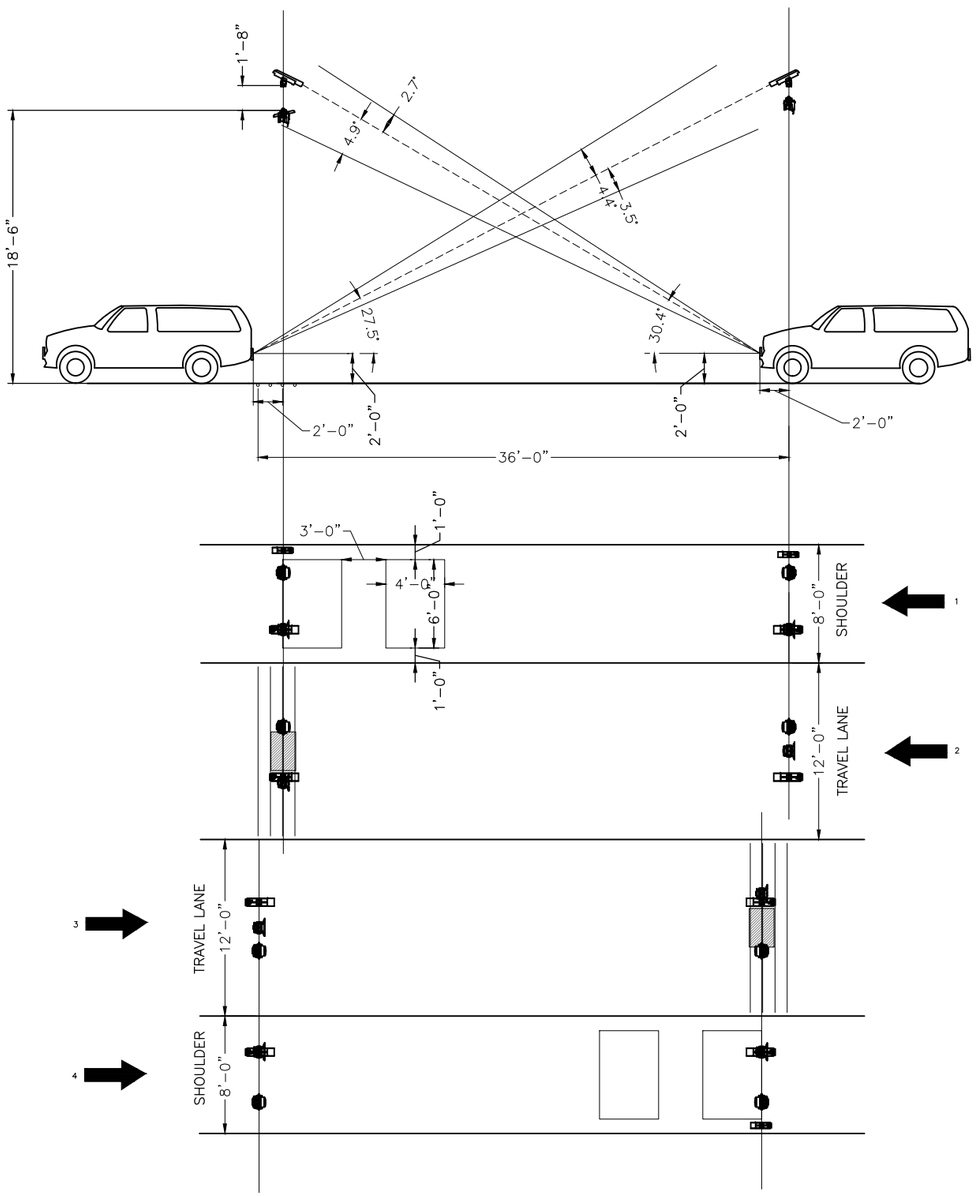

NOTES:

1. SEE GANTRY ELEVATION DETAILS SHEET FOR PROPOSED EQUIPMENT LOCATION ON HANGERS.
2. ANY VARIATION IN THE CRITICAL DIMENSIONS SHOWN ARE TO BE APPROVED BY THE TOLL CONTRACTOR.
3. HANGER DESIGN MUST ACCOUNT FOR LINE OF SIGHTS OF ALL TOLLING EQUIPMENT.
4. HANGER DESIGN MUST PROVIDE FOR VES CAMERA ANGLES BETWEEN 24 AND 32 DEGREES.
5. CENTERLINE OF AVI ANTENNA MOUNT PIPE MUST BE 18'-6" ABOVE FINISHED ROADWAY.
6. COMM RUNS MUST NOT EXCEED 300 CABLE FEET.
7. COAX CABLE RUNS MUST NOT EXCEED 115 CABLE FEET.
8. COAX CABLE BEND RADIUS IS 3 INCHES EVERY 90 DEGREES.
9. CABLES MUST NOT EXCEED 270 DEGREES OF BENDS BETWEEN PULL POINTS.
10. CRITICAL DIMENSIONS SHOWN HERE ARE FOR ONE DIRECTION. THE OPPOSITE DIRECTION WILL HAVE IDENTICAL CRITICAL DIMENSIONS.
11. SEE TREADLE DETAILS SHEETS FOR TREADLE INFORMATION.
12. THIS PLAN AND PROFILE LAYOUT APPLY TO THE SH31 MAINLANE, SALINE MAINLANE AND CR2964 MAINLANE.
13. LANE NUMBERING STARTS AT THE LANE NEAREST THE CABINET.

LANE EQUIPMENT CONFIGURATION				
LANE #	LANE TYPE	LANE WIDTH	ENTRY GANTRY CONFIG	EXIT GANTRY CONFIG
1	SHOULDER	8'	A1	A1
2	TRAVEL LANE	12'	B1	B2
3	TRAVEL LANE	12'	B1	B2
4	SHOULDER	8'	A1	A1

0 5' 10' 20'

DVAS CAMERA, PLAN VIEW
STROBE, PLAN VIEW
VES CAMERA, PLAN VIEW
VES CAMERA, PROFILE VIEW
AVI ANTENNA, PLAN VIEW
AVI ANTENNA, PROFILE VIEW
AVC SCANNER, PLAN VIEW
AVC SCANNER, PROFILE VIEW

PRELIMINARY / DRAFT

FOR REVIEW ONLY. NOT FOR BUILD OR DESIGN WITHOUT APPROVAL BY AUTHORIZED REPRESENTATIVE OF SCHNEIDER ELECTRIC.

DATE	DESCRIPTION	REV.
3/5/2014	ADDED DVAS CAMERAS	1

SCHNEIDER ELECTRIC
211 E SEVENTH STREET, SUITE 800, AUSTIN, TEXAS 78701

NETRMA
RETROFIT
MAINLANE PLAN/PROFILE LAYOUT CRITICAL DIMENSIONS

DATE: 02/26/2014 SHEET 4 OF 33 SHEETS

DESIGNED BY: T. HAMMOND
DRAWN BY: T. HAMMOND
CHECKED BY:

CONFIDENTIAL: THIS DOCUMENT AND THE INFORMATION CONTAINED IN IT ARE CONFIDENTIAL AND CANNOT BE COPIED OR DISCLOSED IN WHOLE OR IN PART WITHOUT THE EXPRESS WRITTEN CONSENT OF **SCHNEIDER ELECTRIC.**

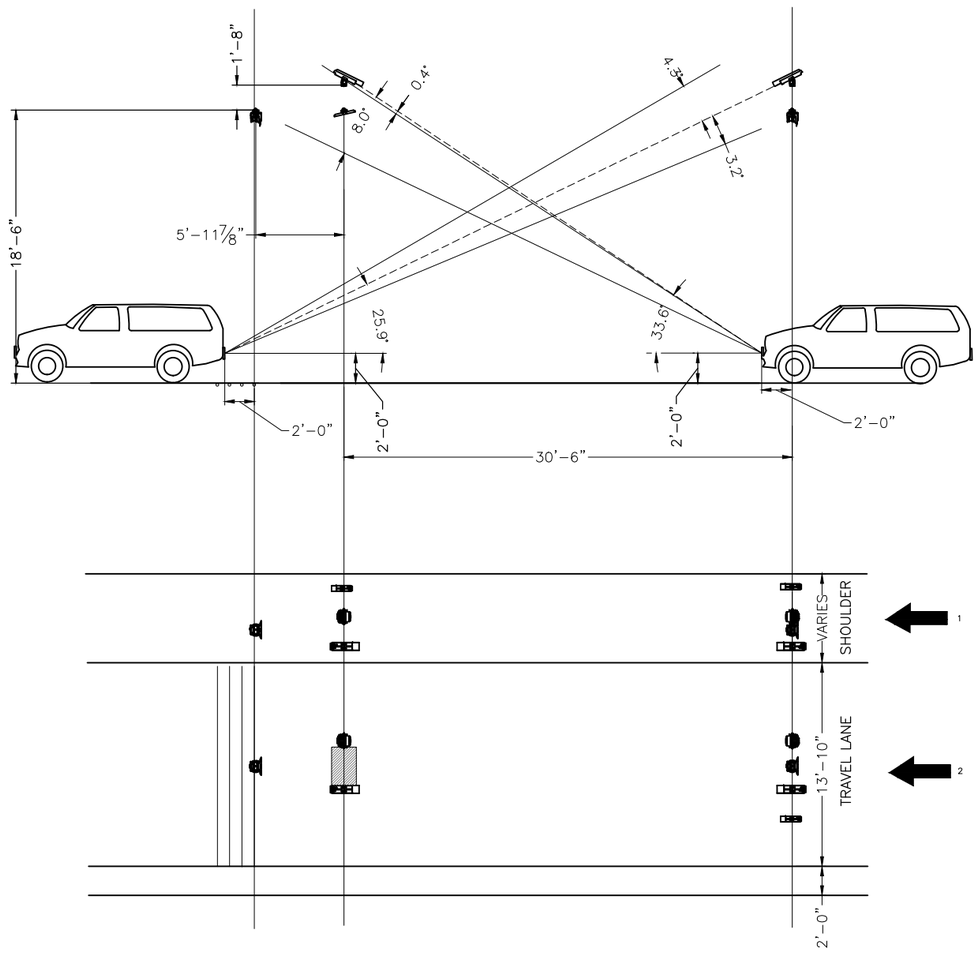

NOTES:

1. SEE GANTRY ELEVATION DETAILS SHEET FOR PROPOSED EQUIPMENT LOCATION ON HANGERS.
2. ANY VARIATION IN THE CRITICAL DIMENSIONS SHOWN ARE TO BE APPROVED BY THE TOLL CONTRACTOR.
3. HANGER DESIGN MUST ACCOUNT FOR LINE OF SIGHTS OF ALL TOLLING EQUIPMENT.
4. HANGER DESIGN MUST PROVIDE FOR VES CAMERA ANGLES BETWEEN 24 AND 32 DEGREES.
5. CENTERLINE OF AVI ANTENNA MOUNT PIPE MUST BE 18'-6" ABOVE FINISHED ROADWAY.
6. COMM RUNS MUST NOT EXCEED 300 CABLE FEET.
7. COAX CABLE RUNS MUST NOT EXCEED 115 CABLE FEET.
8. COAX CABLE BEND RADIUS IS 3 INCHES EVERY 90 DEGREES.
9. CABLES MUST NOT EXCEED 270 DEGREES OF BENDS BETWEEN PULL POINTS.
10. SEE TREADLE DETAILS SHEETS FOR TREADLE INFORMATION.
11. THIS PLAN AND PROFILE LAYOUT APPLY TO ALL RAMP ZONES.
12. LANE NUMBERING STARTS AT THE LANE NEAREST THE CABINET.

LANE EQUIPMENT CONFIGURATION				
LANE ID	LANE TYPE	LANE WIDTH	ENTRY GANTRY CONFIG	EXIT GANTRY CONFIG
1	SHOULDER	VARIES: 5'-8" TO 6'-6"	A1	A1
2	TRAVEL LANE	13'-10"	B1	B2

0 5' 10' 20'

DVAS CAMERA, PLAN VIEW
STROBE, PLAN VIEW
VES CAMERA, PLAN VIEW
VES CAMERA, PROFILE VIEW
AVI ANTENNA, PLAN VIEW
AVI ANTENNA, PROFILE VIEW
AVC SCANNER, PLAN VIEW
AVC SCANNER, PROFILE VIEW

PRELIMINARY / DRAFT

FOR REVIEW ONLY. NOT FOR BUILD OR DESIGN WITHOUT APPROVAL BY AUTHORIZED REPRESENTATIVE OF SCHNEIDER ELECTRIC.

DATE	DESCRIPTION	REV.
3/5/2014	ADDED DVAS CAMERAS	1

SCHNEIDER ELECTRIC
211 E SEVENTH STREET, SUITE 800, AUSTIN, TEXAS 78701

NETRMA
RETROFIT
RAMP PLAN/PROFILE LAYOUT CRITICAL DIMENSIONS

DATE: 02/26/2014 SHEET 5 OF 33 SHEETS

DESIGNED BY: T. HAMMOND
DRAWN BY: T. HAMMOND
CHECKED BY:

CONFIDENTIAL: THIS DOCUMENT AND THE INFORMATION CONTAINED IN IT ARE CONFIDENTIAL AND CANNOT BE COPIED OR DISCLOSED IN WHOLE OR IN PART WITHOUT THE EXPRESS WRITTEN CONSENT OF **SCHNEIDER ELECTRIC.**

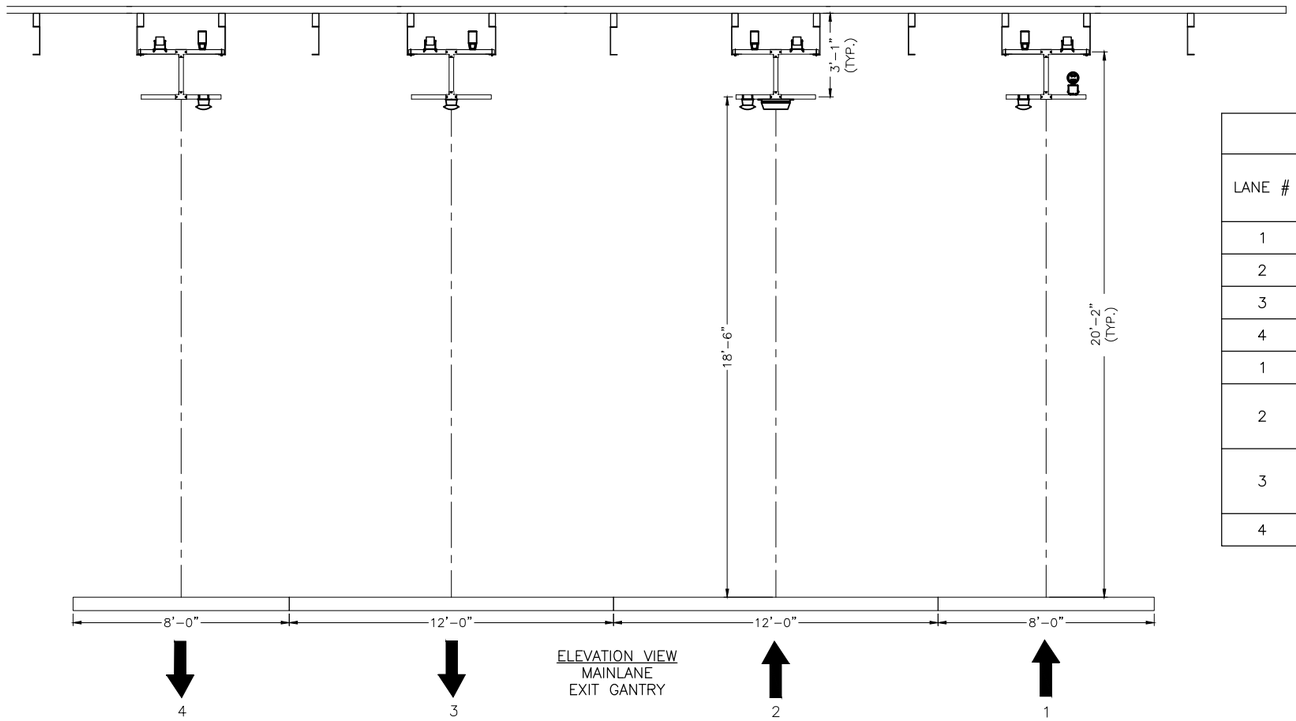

ELEVATION VIEW
MAINLANE
EXIT GANTRY

MAINLANE EQUIPMENT NUMBERING													
LANE #	GANTRY	UPS #	PDU/ATS #	POWER SUPPLY #s	RED. MOD. #s	SWITCH #	DVAS CAM. #	VES CAM/STROBE #	VES SENSOR	AVC SCANNER #	TREADLE CARD #	TREADLE #	LOOP CARD #
1	ENTRY	1	1	1–4	1–2	1	1	1	1	1	N/A	N/A	1
2							N/A	2	N/A	2	N/A	N/A	N/A
3							N/A	3	N/A	3	N/A	N/A	N/A
4							2	4	N/A	4	N/A	N/A	1
1	EXIT	2	2	5–8	3–4	2	3	5	N/A	5	N/A	N/A	2
2							N/A	6	N/A	6	1 (NOTE 5)	1, 2	N/A
											3	3, 4	
3							N/A	7	N/A	7	2 (NOTE 5)	1, 2	N/A
											4	3, 4	
4							4	8	N/A	8	N/A	N/A	2

DVAS CAMERA, ELEVATION VIEW

STROBE, ELEVATION VIEW

VES CAMERA, ELEVATION VIEW

AVI ANTENNA, ELEVATION VIEW

AVC SCANNER, ELEVATION VIEW

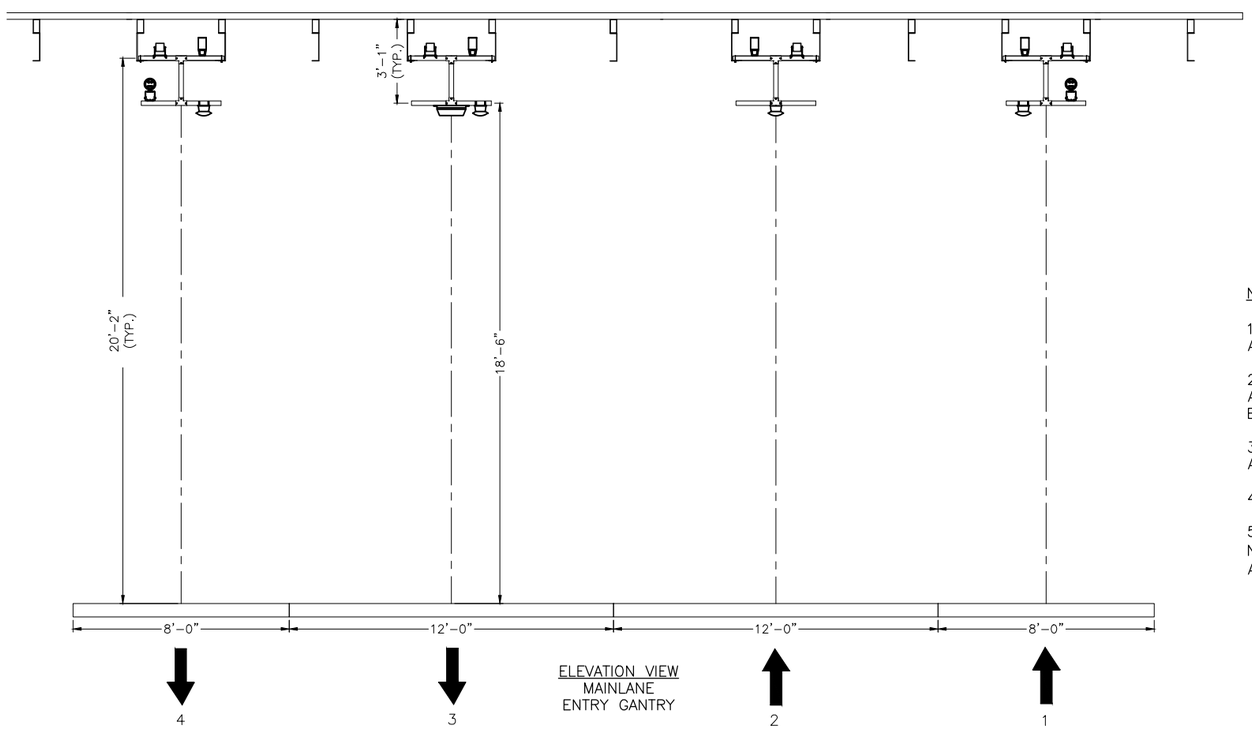

ELEVATION VIEW
MAINLANE
ENTRY GANTRY

NOTES:

1. CENTERLINE OF LOWER EQUIPMENT CROSS MEMBER MUST BE 18'–6" ABOVE ROAD SURFACE.

2. LOWER EQUIPMENT CROSS MEMBER IS ESTIMATED FROM RAYTHEON AS–BUILT DRAWINGS TO BE APPROXIMATELY 3 FEET BELOW GANTRY BOTTOM CROSS MEMBER.

3. SOME EQUIPMENT CHANNELS MAY HAVE TO BE REVERSED TO ACCOMMODATE NEW EQUIPMENT AND HANGER DESIGN.

4. LANE NUMBERING STARTS FROM THE LANE NEAREST THE CABINET.

5. IN THE MAINLANE EQUIPMENT NUMBERING TABLE, TREADLE CARD NUMBERS 1 AND 2 WILL CONNECT TO UPS AND PDU/ATS #1 AND THEIR ASSOCIATED POWER SUPPLIES/REDUNDANCY MODULES.

PRELIMINARY / DRAFT

FOR REVIEW ONLY. NOT FOR BUILD OR DESIGN WITHOUT APPROVAL BY AUTHORIZED REPRESENTATIVE OF SCHNEIDER ELECTRIC.

DATE	DESCRIPTION	REV.
3/5/2014	ADDED DVAS CAMERAS	1

SCHNEIDER ELECTRIC
211 E SEVENTH STREET, SUITE 800, AUSTIN, TEXAS 78701

NETRMA
RETROFIT
MAINLANE ELEVATION DETAILS

DATE: 02/26/2014

DESIGNED BY: T. HAMMOND
DRAWN BY: T. HAMMOND
CHECKED BY:

CONFIDENTIAL: THIS DOCUMENT AND THE INFORMATION CONTAINED IN IT ARE CONFIDENTIAL AND CANNOT BE COPIED OR DISCLOSED IN WHOLE OR IN PART WITHOUT THE EXPRESS WRITTEN CONSENT OF **SCHNEIDER ELECTRIC.**

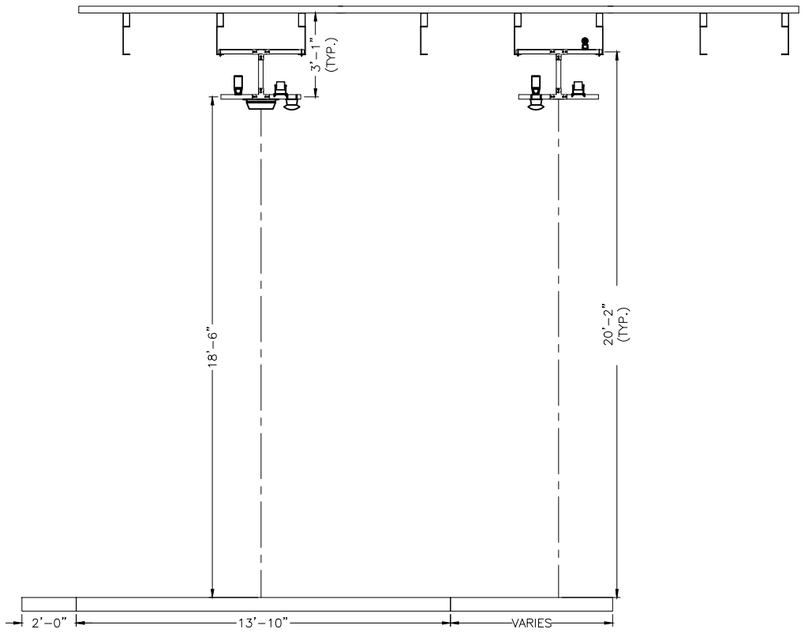

2 ELEVATION VIEW RAMP EXIT GANTRY 1

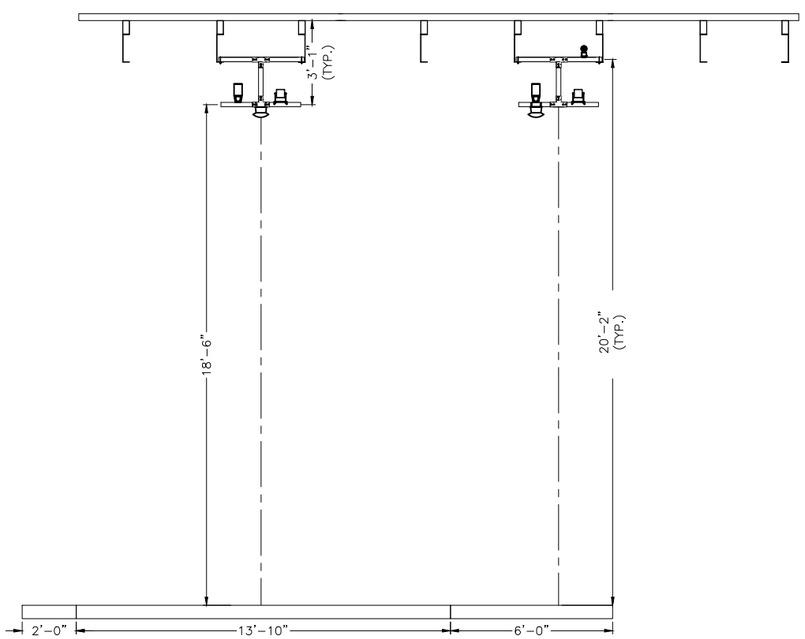

2 ELEVATION VIEW RAMP ENTRY GANTRY 1

RAMP EQUIPMENT NUMBERING													
LANE #	GANTRY	UPS #	PDU/ATS #	POWER SUPPLY #s	RED. MOD. #s	SWITCH #	DVAS CAM. #	VES CAM/STROBE #	VES SENSOR	AVC SCANNER #	TREADLE CARD #	TREADLE #	LOOP CARD #
1	ENTRY	1	1	1–2	1	1	1	1	1	1	N/A	N/A	N/A
2							2	2	N/A	2	N/A	N/A	N/A
1	EXIT	2	2	3–4	2	2	3	3	N/A	3	N/A	N/A	N/A
2							4	4	N/A	4	1 (NOTE 5)	1, 2	N/A
											2	3, 4	N/A

DVAS CAMERA, ELEVATION VIEW

STROBE, ELEVATION VIEW

VES CAMERA, ELEVATION VIEW

AVI ANTENNA, ELEVATION VIEW

AVC SCANNER, ELEVATION VIEW

NOTES:

1. CENTERLINE OF LOWER EQUIPMENT CROSS MEMBER MUST BE 18'–6" ABOVE ROAD SURFACE.

2. LOWER EQUIPMENT CROSS MEMBER IS ESTIMATED FROM RAYTHEON AS–BUILT DRAWINGS TO BE APPROXIMATELY 3 FEET BELOW GANTRY BOTTOM CROSS MEMBER.

3. SOME EQUIPMENT CHANNELS MAY HAVE TO BE REVERSED TO ACCOMMODATE NEW EQUIPMENT AND HANGER DESIGN.

4. LANE NUMBERING STARTS FROM THE LANE NEAREST THE CABINET.

5. IN THE RAMP EQUIPMENT NUMBERING TABLE, TREADLE CARD NUMBER 1 WILL CONNECT TO UPS AND PDU/ATS #1 AND THEIR ASSOCIATED POWER SUPPLIES/REDUNDANCY MODULES.

6. EQUIPMENT CHANNELS ARE MOUNTED AT VARYING INTERVALS. FIELD MEASUREMENTS MUST BE TAKEN ONCE A SITE HAS CHANGED HANDS. THE UPPER CROSS MEMBER CAN THEN BE FIELD MEASURED AND CUT TO THE APPROPRIATE SIZE TO FIT BETWEEN TWO EQUIPMENT CHANNELS.

PRELIMINARY / DRAFT

FOR REVIEW ONLY. NOT FOR BUILD OR DESIGN WITHOUT APPROVAL BY AUTHORIZED REPRESENTATIVE OF SCHNEIDER ELECTRIC.

DATE	DESCRIPTION	REV.
3/5/2014	ADDED DVAS CAMERAS	1

SCHNEIDER ELECTRIC
211 E SEVENTH STREET, SUITE 800, AUSTIN, TEXAS 78701

NETRMA
RETROFIT
RAMP ELEVATION DETAILS

DATE: 02/26/2014

DESIGNED BY: T. HAMMOND
DRAWN BY: T. HAMMOND
CHECKED BY:

CONFIDENTIAL: THIS DOCUMENT AND THE INFORMATION CONTAINED IN IT ARE CONFIDENTIAL AND CANNOT BE COPIED OR DISCLOSED IN WHOLE OR IN PART WITHOUT THE EXPRESS WRITTEN CONSENT OF **SCHNEIDER ELECTRIC.**

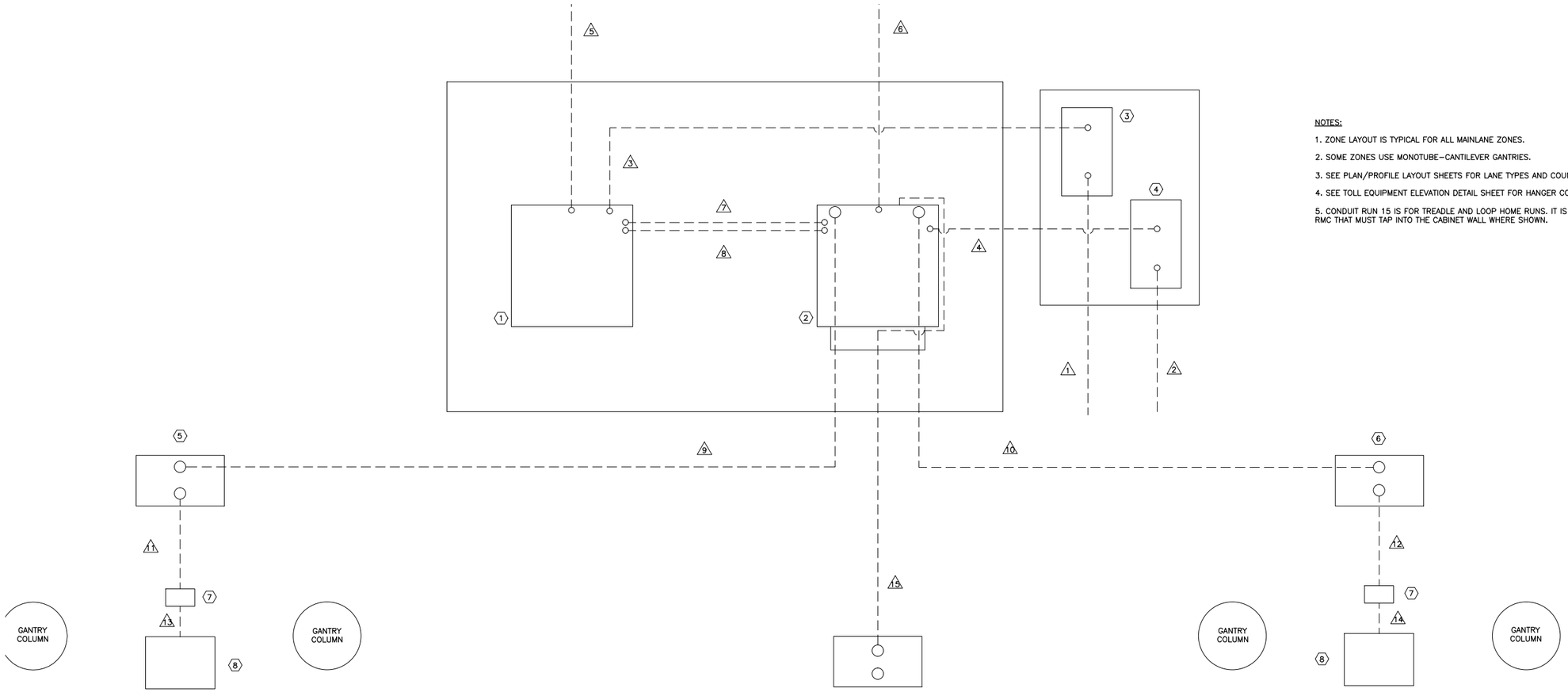

NOTES:

1. ZONE LAYOUT IS TYPICAL FOR ALL MAINLANE ZONES.
2. SOME ZONES USE MONOTUBE–CANTILEVER GANTRIES.
3. SEE PLAN/PROFILE LAYOUT SHEETS FOR LANE TYPES AND COUNTS.
4. SEE TOLL EQUIPMENT ELEVATION DETAIL SHEET FOR HANGER CONFIGURATIONS.
5. CONDUIT RUN 15 IS FOR TREADLE AND LOOP HOME RUNS. IT IS AN EXPOSED 4" RMC THAT MUST TAP INTO THE CABINET WALL WHERE SHOWN.

ZONE COMPONENTS	
ITEM #	COMPONENT
1	GENERATOR
2	TOLLING CABINET
3	POWER GROUND BOX
4	COMM GROUND BOX
5	WEST GANTRY GR. BOX
6	EAST GANTRY GR. BOX
7	SMALL ENCLOSURE
8	READER CABINET

CONDUIT AND CABLE RUNS FOR RISER DETAILS ON GANTRY ELEVATIONS

RUN NUMBER	CONDUIT					CONDUCTORS												TOTALS			
		SIZE/TYPE CONDUIT				DVAS Camera		VES Light Sensor	VES Camera		AVC Scanner		AVI			Fiber Optic Cable					
		EXPOSED			TRENCH								Reader		Antenna	Treadle	Inter-connect				
RUN NUMBER	Conduit Status	3" Sch 40	4" RMC	Monotube Gantry	2" Sch 40	14 AWG, 2pr	23 AWG, 4pr - CAT6	14 AWG, 2pr	14 AWG, 2pr	23 AWG, 4pr - CAT6	14 AWG, 2pr	23 AWG, 4pr - CAT6	14 AWG, 2pr	23 AWG, 4pr - CAT6	LMR-600 Coax	FO Feeder Cable	12 Strand MM Fiber	RUN NUMBER	Total Conduit Area (Sq In)	Total Cable Area (Sq In)	Fill Percentage
1	E				1													1	3.3556	0.0000	0.0%
2	E				1													2	3.3556	0.0000	0.0%
3	E				1													3	3.3556	0.0000	0.0%
4	E				1													4	3.3556	0.0000	0.0%
5	E				1													5	3.3556	0.0000	0.0%
6	E				1													6	3.3556	0.0000	0.0%
7	E				1													7	3.3556	0.0000	0.0%
8	E				1													8	3.3556	0.0000	0.0%
9	E				1	1	2	1	4	4	4	4	1	1				9	3.3556	2.4650	73.5%
10	E				1	1	2	1	4	4	4	4	1	1				10	3.3556	2.4650	73.5%
11	E				1	1	2	1	4	4	4	4	1	1				11	3.3556	2.4650	73.5%
12	E				1	1	2	1	4	4	4	4	1	1				12	3.3556	2.4650	73.5%
13	I	1													1			13	7.3927	0.2734	3.7%
14	I	1													1			14	7.3927	0.2734	3.7%
15	I		1													8		15	12.7303	0.1550	1.2%

CONDUIT SCHEDULE					
RUN #	CONDUIT FUNCTION	CONDUIT TYPE	CONDUIT QUANTITY	CONDUIT SIZE	RUN LENGTH
1	INCOMING POWER	SCH 40	1	2"	N/A
2	INCOMING COMMS	SCH 40	1	2"	N/A
3	INCOMING POWER	SCH 40	1	2"	20'
4	INCOMING COMMS	SCH 40	1	2"	12'
5	GROUND	SCH 40	1	2"	N/A
6	GROUND	SCH 40	1	2"	N/A
7	GENERATOR POWER	SCH 40	1	2"	10'
8	SPARE	SCH 40	1	2"	10'
9	WEST GANTRY	RMC	1	4"	30'
10	EAST GANTRY	RMC	1	4"	30'
11	WEST GANTRY	RMC	1	4"	10'
12	EAST GANTRY	RMC	1	4"	3'
13	WEST GANTRY	SCH 40	1	3"	10'
14	EAST GANTRY	SCH 40	1	3"	3'
15	LOOP/TREADLE GR. BOX	RMC	1	4"	15'

PRELIMINARY / DRAFT

FOR REVIEW ONLY. NOT FOR BUILD OR DESIGN WITHOUT APPROVAL BY AUTHORIZED REPRESENTATIVE OF SCHNEIDER ELECTRIC.

DATE	DESCRIPTION	REV.

SCHNEIDER ELECTRIC
211 E SEVENTH STREET, SUITE 800, AUSTIN, TEXAS 78701

NETRMA
RETROFIT
TOLLING PAD DETAILS
MAINLANE

DATE: 02/26/2014 SHEET 8 OF 33 SHEETS

DESIGNED BY: T. HAMMOND
DRAWN BY: T. HAMMOND
CHECKED BY:

CONFIDENTIAL: THIS DOCUMENT AND THE INFORMATION CONTAINED IN IT ARE CONFIDENTIAL AND CANNOT BE COPIED OR DISCLOSED IN WHOLE OR IN PART WITHOUT THE EXPRESS WRITTEN CONSENT OF **SCHNEIDER ELECTRIC.**

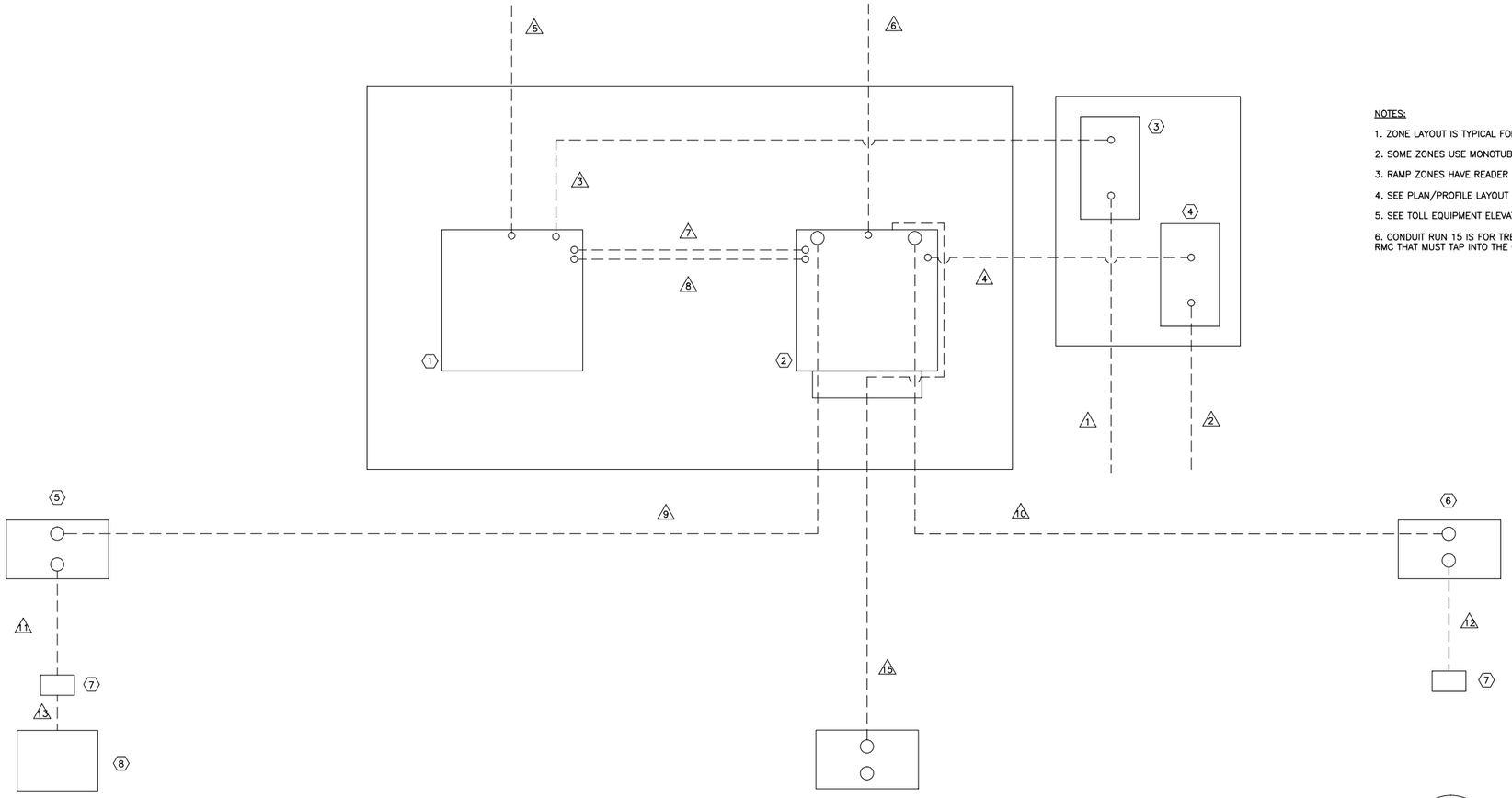

NOTES:

1. ZONE LAYOUT IS TYPICAL FOR ALL RAMP ZONES.
2. SOME ZONES USE MONOTUBE–CANTILEVER GANTRIES.
3. RAMP ZONES HAVE READER CABINET ON EXIT GANTRY ONLY.
4. SEE PLAN/PROFILE LAYOUT SHEETS FOR LANE TYPES AND COUNTS.
5. SEE TOLL EQUIPMENT ELEVATION DETAIL SHEET FOR HANGER CONFIGURATIONS.
6. CONDUIT RUN 15 IS FOR TREADLE AND LOOP HOME RUNS. IT IS AN EXPOSED 4" RMC THAT MUST TAP INTO THE CABINET WALL WHERE SHOWN.

ZONE COMPONENTS	
ITEM # ⬡	COMPONENT
1	GENERATOR
2	TOLLING CABINET
3	POWER GROUND BOX
4	COMM GROUND BOX
5	EXIT GANTRY GR. BOX
6	ENTRY GANTRY GR. BOX
7	SMALL ENCLOSURE
8	READER CABINET

CONDUIT AND CABLE RUNS FOR RISER DETAILS ON GANTRY ELEVATIONS

RUN NUMBER	CONDUIT					CONDUCTORS												TOTALS			
	Conduit Status	SIZE/TYPE CONDUIT				DVAS Camera		VES Light Sensor	VES Camera		AVC Scanner		AVI			Fiber Optic Cable		RUN NUMBER	Total Conduit Area (Sq In)	Total Cable Area (Sq In)	Fill Percentage
		EXPOSED			TRENCH								Reader		Antenna	Treadle	Inter-connect				
		3" Sch 40	4" RMC	Monotube Gantry	2" Sch 40	14 AWG, 2pr	23 AWG, 4pr - CAT6	14 AWG, 2pr	14 AWG, 2pr	23 AWG, 4pr - CAT6	14 AWG, 2pr	23 AWG, 4pr - CAT6	14 AWG, 2pr	23 AWG, 4pr - CAT6	LMR-600 Coax	FO Feeder Cable	12 Strand MM Fiber				
1	E				1													1	3.3556	0.0000	0.0%
2	E				1													2	3.3556	0.0000	0.0%
3	E				1													3	3.3556	0.0000	0.0%
4	E				1													4	3.3556	0.0000	0.0%
5	E				1													5	3.3556	0.0000	0.0%
6	E				1													6	3.3556	0.0000	0.0%
7	E				1													7	3.3556	0.0000	0.0%
8	E				1													8	3.3556	0.0000	0.0%
9	E				1	1	2	1	2	2	2	2		1				9	3.3556	1.4640	43.6%
10	E				1	1	2	1	2	2	2	2		1				10	3.3556	1.4640	43.6%
11	E				1	1	2	1	2	2	2	2		1				11	3.3556	1.4640	43.6%
12	E				1	1	2	1	2	2	2	2		1				12	3.3556	1.4640	43.6%
13	I	1													1			13	7.3927	0.2734	3.7%
14	I	1																14	7.3927	0.0000	0.0%
15	I		1													4		15	12.7303	0.0775	0.6%

GANTRY COLUMN

CONDUIT SCHEDULE					
RUN # △	CONDUIT FUNCTION	CONDUIT TYPE	CONDUIT QUANTITY	CONDUIT SIZE	RUN LENGTH
1	INCOMING POWER	SCH 40	1	2"	N/A
2	INCOMING COMMS	SCH 40	1	2"	N/A
3	INCOMING POWER	SCH 40	1	2"	20'
4	INCOMING COMMS	SCH 40	1	2"	12'
5	GROUND	SCH 40	1	2"	N/A
6	GROUND	SCH 40	1	2"	N/A
7	GENERATOR POWER	SCH 40	1	2"	10'
8	SPARE	SCH 40	1	2"	10'
9	EXIT GANTRY	RMC	1	4"	30'
10	ENTRY GANTRY	RMC	1	4"	30'
11	EXIT GANTRY	RMC	1	4"	10'
12	ENTRY GANTRY	RMC	1	4"	3'
13	EXIT GANTRY	SCH 40	1	3"	10'
14	ENTRY GANTRY	SCH 40	1	3"	3'
15	LOOP/TREADLE GR. BOX	RMC	1	4"	15'

PRELIMINARY / DRAFT

FOR REVIEW ONLY. NOT FOR BUILD OR DESIGN WITHOUT APPROVAL BY AUTHORIZED REPRESENTATIVE OF SCHNEIDER ELECTRIC.

DATE	DESCRIPTION	REV.

SCHNEIDER ELECTRIC
211 E SEVENTH STREET, SUITE 800, AUSTIN, TEXAS 78701

NETRMA
RETROFIT
TOLLING PAD DETAILS
RAMP

DATE: 02/26/2014

DESIGNED BY: T. HAMMOND
DRAWN BY: T. HAMMOND
CHECKED BY:

CONFIDENTIAL: THIS DOCUMENT AND THE INFORMATION CONTAINED IN IT ARE CONFIDENTIAL AND CANNOT BE COPIED OR DISCLOSED IN WHOLE OR IN PART WITHOUT THE EXPRESS WRITTEN CONSENT OF **SCHNEIDER ELECTRIC.**

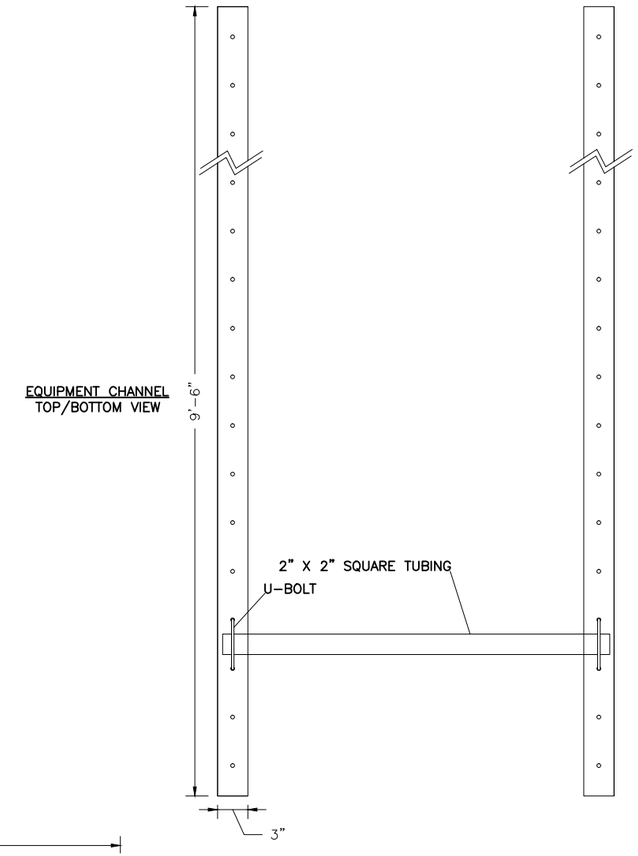

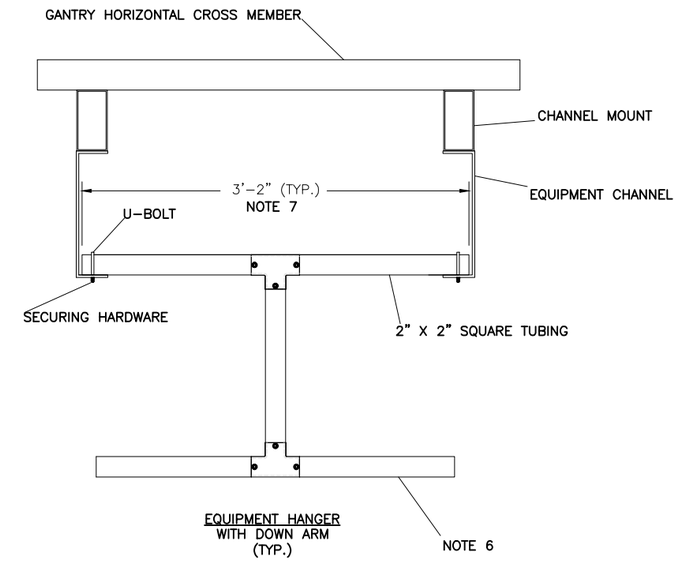

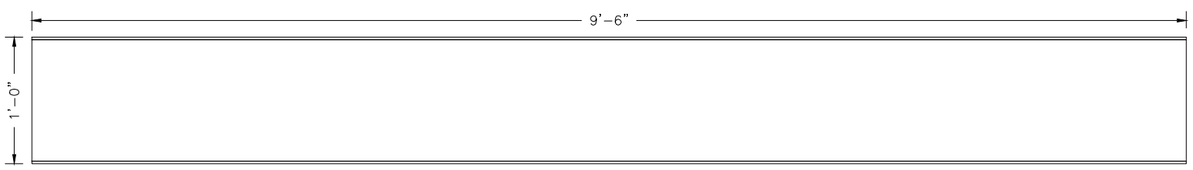

EQUIPMENT CHANNEL
SIDE VIEW

EQUIPMENT CHANNEL
FRONT VIEW

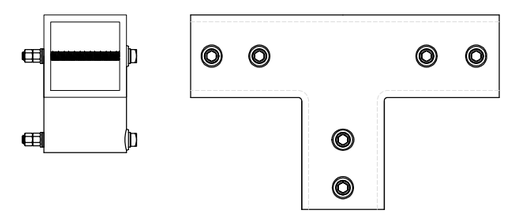

EQUIPMENT HANGER
T-FITTING

NOTES:

1. STEEL TUBING IS 2" X 2" X 14-GAUGE.

2. HORIZONTAL SQUARE TUBE LENGTHS AND DISTANCE BETWEEN I-BEAMS MUST BE FIELD VERIFIED PRIOR TO ANY FABRICATION.

3. VERTICAL SQUARE TUBE LENGTHS MUST BE VERIFIED WITH TOLL INTEGRATOR AFTER GANTRY HEIGHTS ARE FIELD VERIFIED.

4. DISTANCE BETWEEN PRE-DRILLED HOLES IN I-BEAM MUST BE FIELD VERIFIED TO PROPERLY SIZE U-BOLTS.

5. SOME CHANNELS MAY HAVE TO BE REVERSED TO ACCOMMODATE NEW EQUIPMENT.

6. LENGTH OF BOTTOM HORIZONTAL CROSS MEMBER VARIES BASED ON FIELD MEASUREMENTS AND PLACEMENT OF HANGER OVER THE LANE.

7. LENGTH OF UPPER HORIZONTAL CROSS MEMBER VARIES BASED ON FIELD MEASUREMENTS.

PRELIMINARY / DRAFT

FOR REVIEW ONLY. NOT FOR BUILD OR DESIGN WITHOUT APPROVAL BY AUTHORIZED REPRESENTATIVE OF SCHNEIDER ELECTRIC.

DATE	DESCRIPTION	REV.

SCHNEIDER ELECTRIC
211 E SEVENTH STREET, SUITE 800, AUSTIN, TEXAS 78701

NETRMA
RETROFIT
EQUIPMENT MOUNT DETAILS

DATE: 02/26/2014

DESIGNED BY: T. HAMMOND
DRAWN BY: T. HAMMOND
CHECKED BY:

CONFIDENTIAL: THIS DOCUMENT AND THE INFORMATION CONTAINED IN IT ARE CONFIDENTIAL AND CANNOT BE COPIED OR DISCLOSED IN WHOLE OR IN PART WITHOUT THE EXPRESS WRITTEN CONSENT OF **SCHNEIDER ELECTRIC.**

LANESIDE CABINET
TOP VIEW

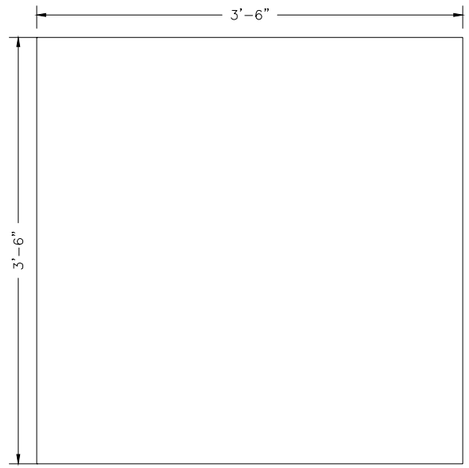

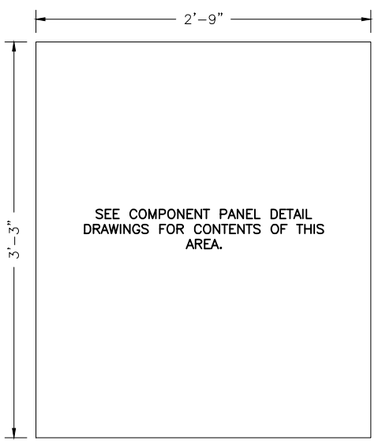

LANESIDE CABINET
SIDE ACCESS

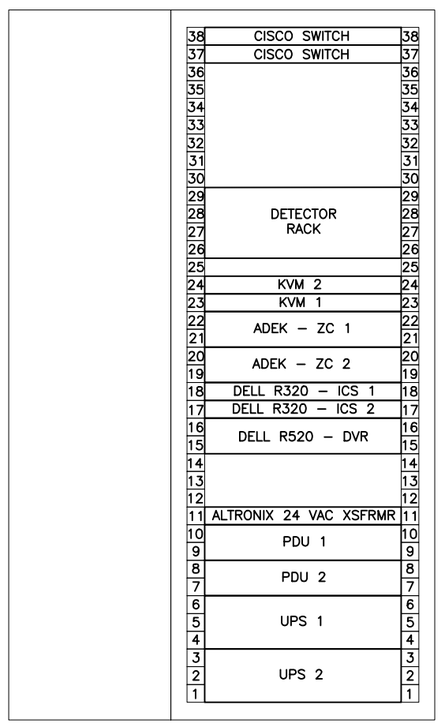

LANESIDE CABINET
FRONT VIEW

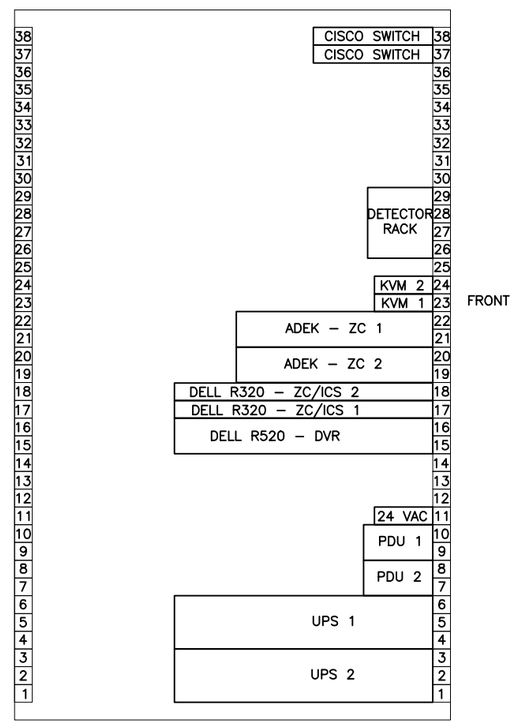

LANESIDE CABINET
SIDE VIEW

PRELIMINARY / DRAFT

FOR REVIEW ONLY. NOT FOR BUILD OR DESIGN WITHOUT APPROVAL BY AUTHORIZED REPRESENTATIVE OF SCHNEIDER ELECTRIC.

DATE	DESCRIPTION	REV.

SCHNEIDER ELECTRIC
211 E SEVENTH STREET, SUITE 800, AUSTIN, TEXAS 78701

NETRMA
RETROFIT EQUIPMENT CABINET DETAILS

DATE: 02/26/2014

DESIGNED BY: T.HAMMOND
DRAWN BY: T. HAMMOND
CHECKED BY:

CONFIDENTIAL: THIS DOCUMENT AND THE INFORMATION CONTAINED IN IT ARE CONFIDENTIAL AND CANNOT BE COPIED OR DISCLOSED IN WHOLE OR IN PART WITHOUT THE EXPRESS WRITTEN CONSENT OF **SCHNEIDER ELECTRIC.**

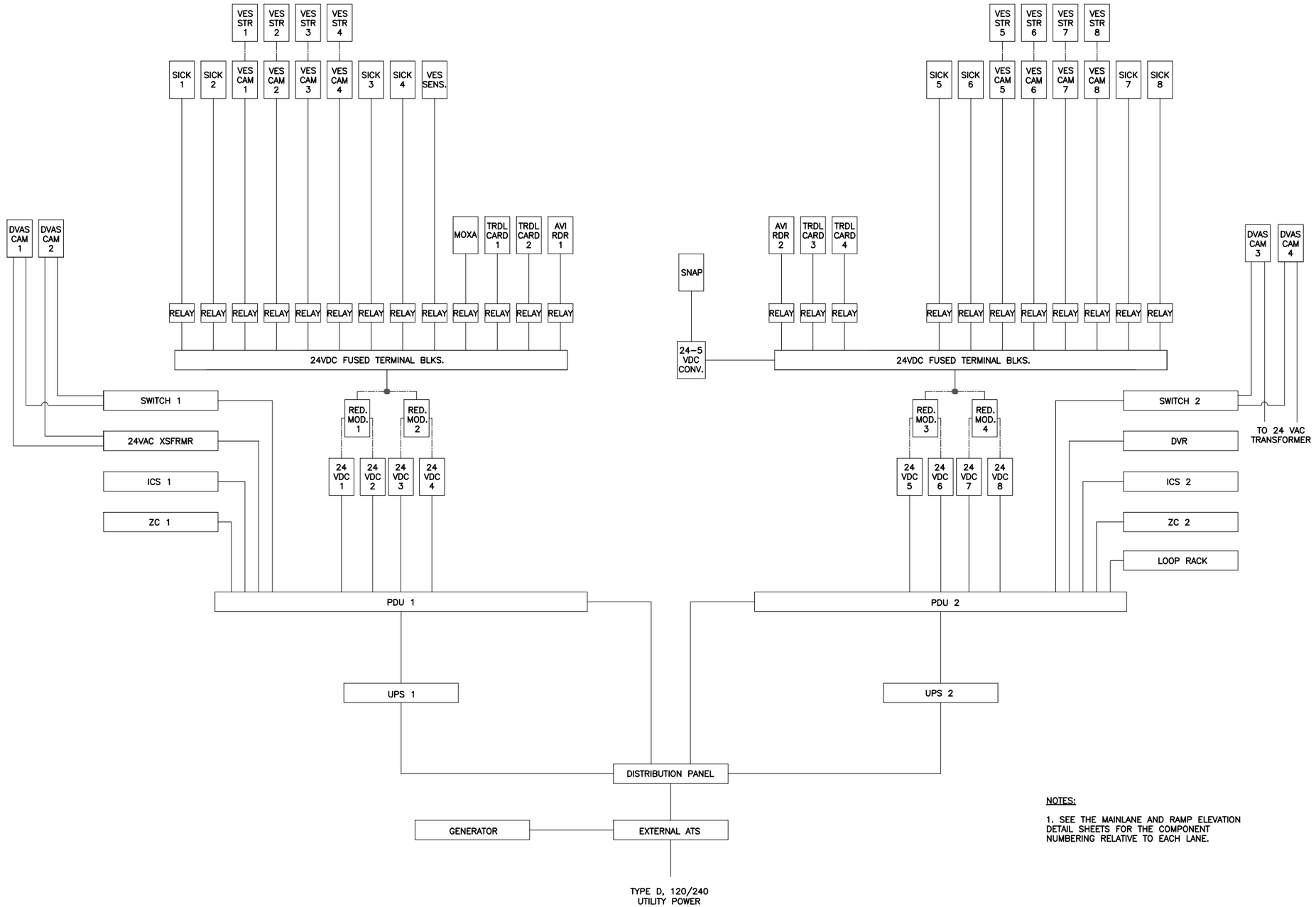

NOTES:

1. SEE THE MAINLANE AND RAMP ELEVATION DETAIL SHEETS FOR THE COMPONENT NUMBERING RELATIVE TO EACH LANE.

PRELIMINARY / DRAFT

FOR REVIEW ONLY. NOT FOR BUILD OR DESIGN WITHOUT APPROVAL BY AUTHORIZED REPRESENTATIVE OF SCHNEIDER ELECTRIC.

DATE	DESCRIPTION	REV.

SCHNEIDER ELECTRIC
211 E SEVENTH STREET, SUITE 800, AUSTIN, TEXAS 78701

NETRMA
RETROFIT
POWER BLOCK DIAGRAM

DATE: 02/26/2014 SHEET 12 OF 33 SHEETS

DESIGNED BY: T.HAMMOND
DRAWN BY: T.HAMMOND
CHECKED BY:

CONFIDENTIAL: THIS DOCUMENT AND THE INFORMATION CONTAINED IN IT ARE CONFIDENTIAL AND CANNOT BE COPIED OR DISCLOSED IN WHOLE OR IN PART WITHOUT THE EXPRESS WRITTEN CONSENT OF **SCHNEIDER ELECTRIC.**

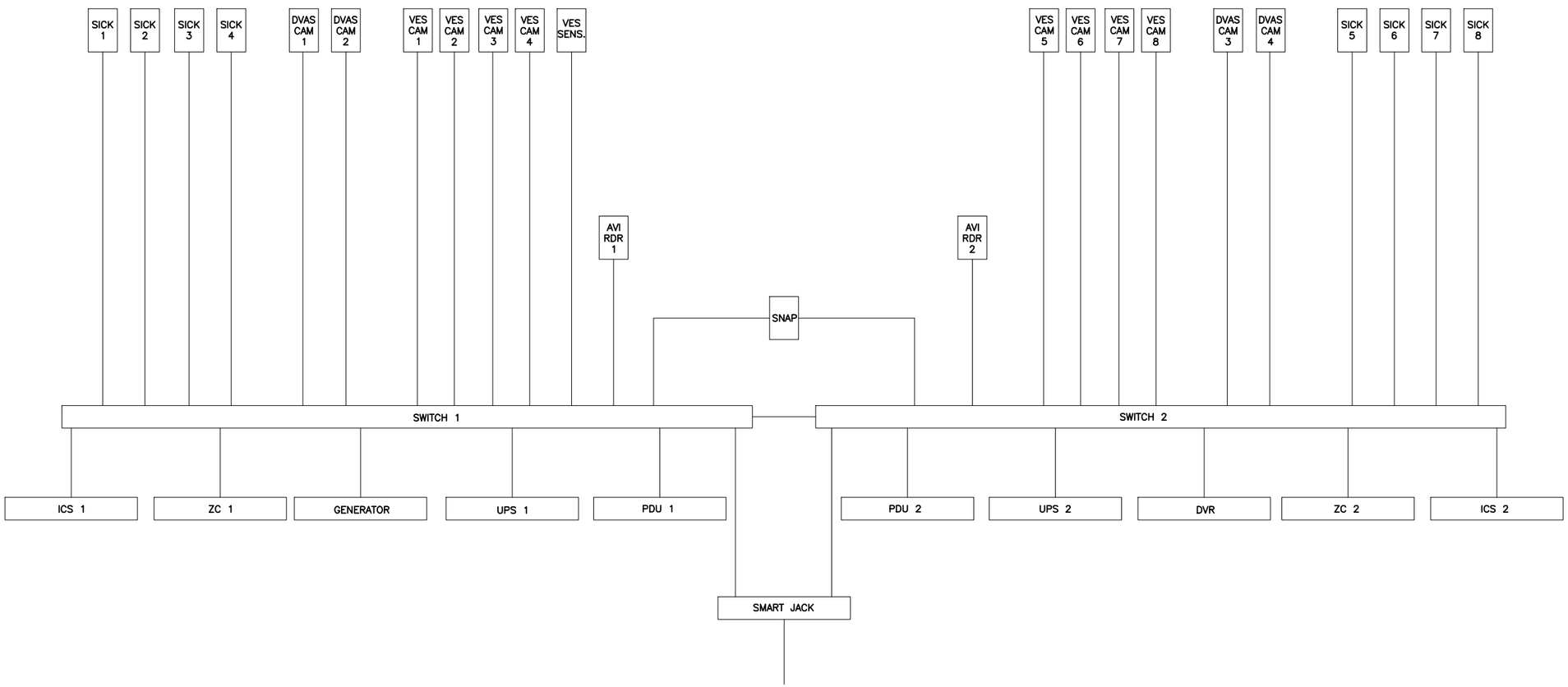

NOTES:

1. THIS REPRESENTS THE EQUIPMENT AT A MAINLANE ZONE. A RAMP ZONE WILL HAVE ONLY FOUR VES CAMERAS/STROBES, FOUR AVC SCANNERS AND ONE AVI READER.
2. RAMP ZONES SHARE A DVR BETWEEN THE ENTRY RAMP AND EXIT RAMP. THE DVR WILL BE LOCATED AT THE RAMP WHERE OUTSIDE COMMUNICATIONS AND POWER TERMINATE.

PRELIMINARY / DRAFT

FOR REVIEW ONLY. NOT FOR BUILD OR DESIGN WITHOUT APPROVAL BY AUTHORIZED REPRESENTATIVE OF SCHNEIDER ELECTRIC.

DATE	DESCRIPTION	REV.
3/5/2014	ADDED READERS	1

SCHNEIDER ELECTRIC
211 E SEVENTH STREET, SUITE 800, AUSTIN, TEXAS 78701

NETRMA
RETROFIT
NETWORK BLOCK DIAGRAM

DATE: 02/26/2014 SHEET 13 OF 33 SHEETS

DESIGNED BY: T.HAMMOND
DRAWN BY: T.HAMMOND
CHECKED BY:

CONFIDENTIAL: THIS DOCUMENT AND THE INFORMATION CONTAINED IN IT ARE CONFIDENTIAL AND CANNOT BE COPIED OR DISCLOSED IN WHOLE OR IN PART WITHOUT THE EXPRESS WRITTEN CONSENT OF **SCHNEIDER ELECTRIC.**

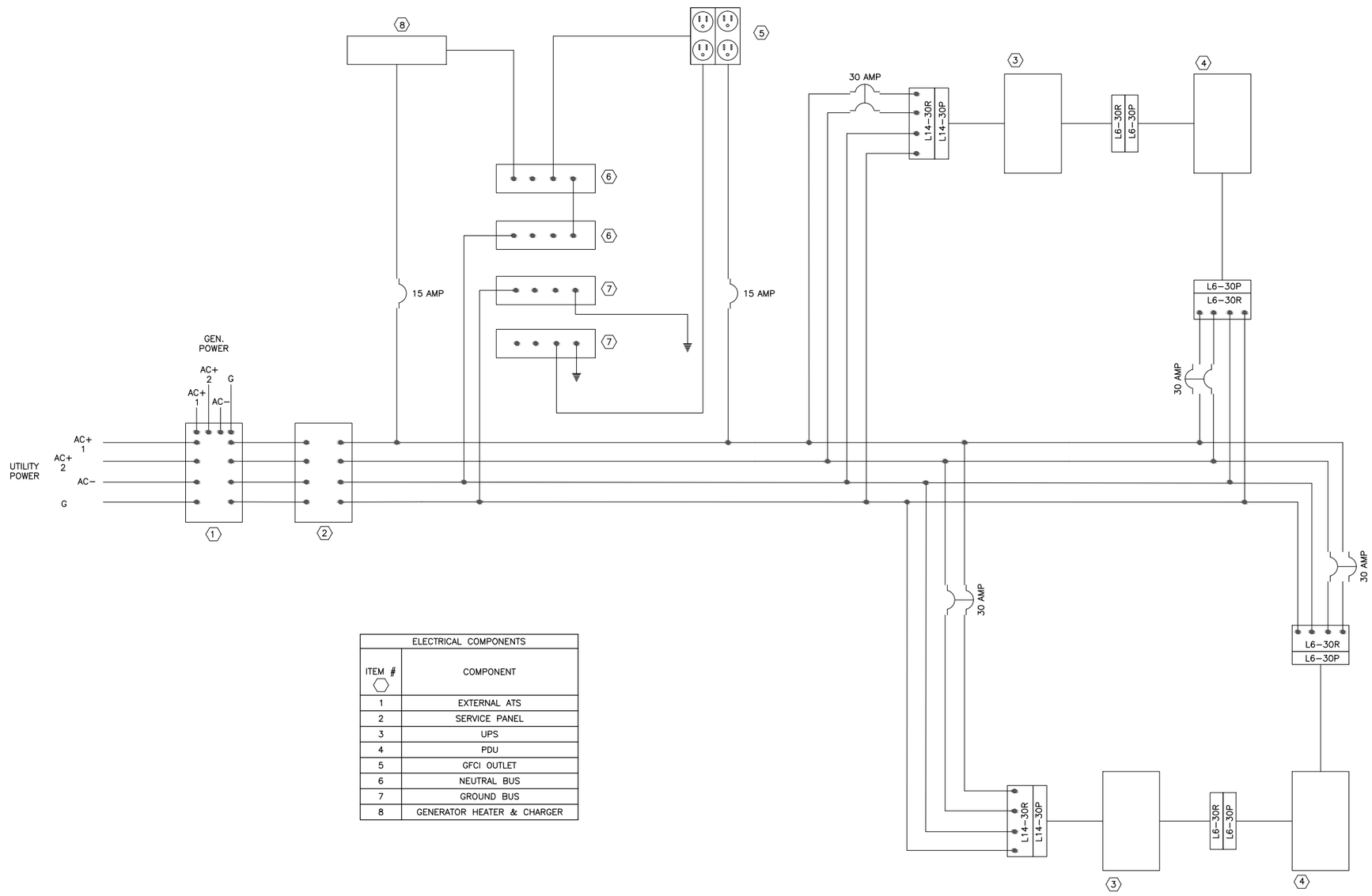

ELECTRICAL COMPONENTS	
ITEM #	COMPONENT
1	EXTERNAL ATS
2	SERVICE PANEL
3	UPS
4	PDU
5	GFCI OUTLET
6	NEUTRAL BUS
7	GROUND BUS
8	GENERATOR HEATER & CHARGER

PRELIMINARY / DRAFT

FOR REVIEW ONLY. NOT FOR BUILD OR DESIGN WITHOUT APPROVAL BY AUTHORIZED REPRESENTATIVE OF SCHNEIDER ELECTRIC.

DATE	DESCRIPTION	REV.

SCHNEIDER ELECTRIC
211 E SEVENTH STREET, SUITE 800, AUSTIN, TEXAS 78701

NETRMA
RETROFIT
POWER SCHEMATIC

DATE: 02/26/2014

SHEET 14 OF 33 SHEETS

DESIGNED BY: T. HAMMOND
DRAWN BY: T. HAMMOND
CHECKED BY:

CONFIDENTIAL: THIS DOCUMENT AND THE INFORMATION CONTAINED IN IT ARE CONFIDENTIAL AND CANNOT BE COPIED OR DISCLOSED IN WHOLE OR IN PART WITHOUT THE EXPRESS WRITTEN CONSENT OF **SCHNEIDER ELECTRIC.**

MAINLANE NETWORK DEVICE LIST

ROW #	LANE #	GANTRY	COMPONENT	SECOND OCTET (xxx.NNN.xxx.xxx)	THIRD OCTET (xxx.xxx.NNN.xxx)	FOURTH OCTET (xxx.xxx.xxx.NNN)	SWITCH #	PORT #
1	1	ENTRY	VES CAMERA	.000	NOTE 3	.041	1	
2			AVC SCANNER	.000		.110	2	
3			DVAS CAMERA	.007		NOTE 2	1	
4	2		VES CAMERA	.000		.042	1	
5			AVC SCANNER	.000		.112	2	
6	3		VES CAMERA	.001		.043	1	
7			AVC SCANNER	.000		.114	2	
8	4		VES CAMERA	.001		.044	1	
9			AVC SCANNER	.000		.116	2	
10			DVAS CAMERA	.007		NOTE 2	1	
11	1	EXIT	VES CAMERA	.001		.061	2	
12			AVC SCANNER	.000		.111	1	
13			DVAS CAMERA	.007		NOTE 2	2	
14	2		VES CAMERA	.001		.062	2	
15			AVC SCANNER	.000		.113	1	
16	3		VES CAMERA	.001		.063	2	
17			AVC SCANNER	.000		.115	1	
18	4		VES CAMERA	.001		.064	2	
19			AVC SCANNER	.000		.117	1	
20			DVAS CAMERA	.007		NOTE 2	2	
21	N/A	ENTRY	AVI READER	.000		.022	1	
22	N/A	EXIT	AVI READER	.000		.023	2	
23	N/A	N/A	MOXA NPORT	.000		.081	1	
24	N/A	N/A	OPTO SNAP	.000		.101	1	
25	N/A	N/A	OPTO SNAP	.001		.101	2	
26	N/A	N/A	PDU 1	.000		.241	1	
27	N/A	N/A	PDU 2	.000		.242	2	
28	N/A	N/A	UPS 1	.000		.236	1	
29	N/A	N/A	UPS 2	.000		.237	2	
30	N/A	N/A	FOSCAM 1	.000		.090	1	
31	N/A	N/A	FOSCAM 2	.000		.091.	1	
32	N/A	N/A	FOSCAM 3	.000		.092	1	
33	N/A	N/A	FOSCAM 4	.000		.093	1	
34	N/A	N/A	KVM	.000		.240	2	
35	N/A	N/A	ICS 1	.000		.201	1	
36	N/A	N/A		.001		.201	1	
37	N/A	N/A		.000		.230	1	
38	N/A	N/A	ZC 1	.000		.001	1	
39	N/A	N/A		.001		.001	1	
40	N/A	N/A	ICS 2	.000		.202	2	
41	N/A	N/A		.001		.202	2	
42	N/A	N/A		.000		.231	2	
43	N/A	N/A	ZC 2	.000		.002	2	
44	N/A	N/A		.001		.002	2	
45	N/A	N/A	DVR	.007	.007	NOTE 2	2	
46	N/A	N/A		.007		NOTE 2	2	
47	N/A	N/A		.007		NOTE 2	2	
48								

RAMP NETWORK DEVICE LIST

ROW #	LANE #	GANTRY	COMPONENT	SECOND OCTET (xxx.NNN.xxx.xxx)	THIRD OCTET (xxx.xxx.NNN.xxx)	FOURTH OCTET (xxx.xxx.xxx.NNN)	SWITCH #	PORT #
1	1	ENTRY	VES CAMERA	.000	NOTE 3	.041	1	
2			AVC SCANNER	.000		.110	2	
3			DVAS CAMERA	.007		NOTE 2	1	
4	2		VES CAMERA	.001		.042	1	
5			AVC SCANNER	.000		.112	2	
6			DVAS CAMERA	.007		NOTE 2	1	
7	1	EXIT	VES CAMERA	.001		.061	2	
8			AVC SCANNER	.000		.111	1	
9			DVAS CAMERA	.007		NOTE 2	2	
10	2		VES CAMERA	.000		.062	2	
11			AVC SCANNER	.000		.113	1	
12			DVAS CAMERA	.007		NOTE 2	2	
13	N/A	EXIT	AVI READER	.000		.022	2	
14	N/A	N/A	MOXA NPORT	.000		.081	1	
15	N/A	N/A	OPTO SNAP	.000		.101	1	
16	N/A	N/A	OPTO SNAP	.001		.101	2	
17	N/A	N/A	PDU 1	.000		.241	1	
18	N/A	N/A	PDU 2	.000		.242	2	
19	N/A	N/A	UPS 1	.000		.236	1	
20	N/A	N/A	UPS 2	.000		.237	2	
21	N/A	N/A	FOSCAM 1	.000		.090	1	
22	N/A	N/A	FOSCAM 2	.000		.091	1	
23	N/A	N/A	FOSCAM 3	.000		.092	1	
24	N/A	N/A	FOSCAM 4	.000		.093	1	
25	N/A	N/A	KVM	.000		.240	2	
26	N/A	N/A	ICS 1	.000		.201	1	
27	N/A	N/A		.001		.201	1	
28	N/A	N/A		.000		.230	1	
29	N/A	N/A	ZC 1	.000		.001	1	
30	N/A	N/A		.001		.001	1	
31	N/A	N/A	ICS 2	.000		.202	2	
32	N/A	N/A		.001		.202	2	
33	N/A	N/A		.000		.231	2	
34	N/A	N/A	ZC 2	.000		.002	2	
35	N/A	N/A		.001		.002	2	
36	N/A	N/A	DVR	.007	.007	NOTE 2	2	
37	N/A	N/A		.007		NOTE 2	2	
38	N/A	N/A		.007		NOTE 2	2	
39								
40								
41								
42								
43								
44								
45								
46								
47								
48								

SYSTEM IP SCHEME

LOCATION	NETWORK
SH 31 ML	xxx.xxx.043.xxx
SALINE ML	xxx.xxx.044.xxx
FM 2493 WB	xxx.xxx.045.xxx
FM 2493 EB	xxx.xxx.046.xxx
FM 756 WB	xxx.xxx.047.xxx
FM 756 EB	xxx.xxx.048.xxx
SH 110 ML	xxx.xxx.049.xxx

NOTES:

1. BECAUSE THE MAINLANES ARE BI–DIRECTIONAL, THE GANTRIES ARE LABELED 'ENTRY' AND 'EXIT' TRAVELING FROM EAST TO WEST.
2. DVAS CAMERAS WILL BE NUMBERED IN SEQUENTIAL ASCENDING ORDER FROM PREVIOUS ZONE.
3. SEE SYSTEM IP SCHEME TABLE (THIS SHEET) FOR THIRD OCTET VALUE.
4. THE FIRST OCTET FOR ALL NETWORKS IS 010.

PRELIMINARY / DRAFT

FOR REVIEW ONLY. NOT FOR BUILD OR DESIGN WITHOUT APPROVAL BY AUTHORIZED REPRESENTATIVE OF SCHNEIDER ELECTRIC.

DATE	DESCRIPTION	REV.

SCHNEIDER ELECTRIC
211 E SEVENTH STREET, SUITE 800, AUSTIN, TEXAS 78701

NETRMA
RETROFIT
NETWORK DEVICE LIST

DATE: 02/26/2014 SHEET 15 OF 33 SHEETS

DESIGNED BY: T.HAMMOND
DRAWN BY: T.HAMMOND
CHECKED BY:

CONFIDENTIAL: THIS DOCUMENT AND THE INFORMATION CONTAINED IN IT ARE CONFIDENTIAL AND CANNOT BE COPIED OR DISCLOSED IN WHOLE OR IN PART WITHOUT THE EXPRESS WRITTEN CONSENT OF **SCHNEIDER ELECTRIC.**

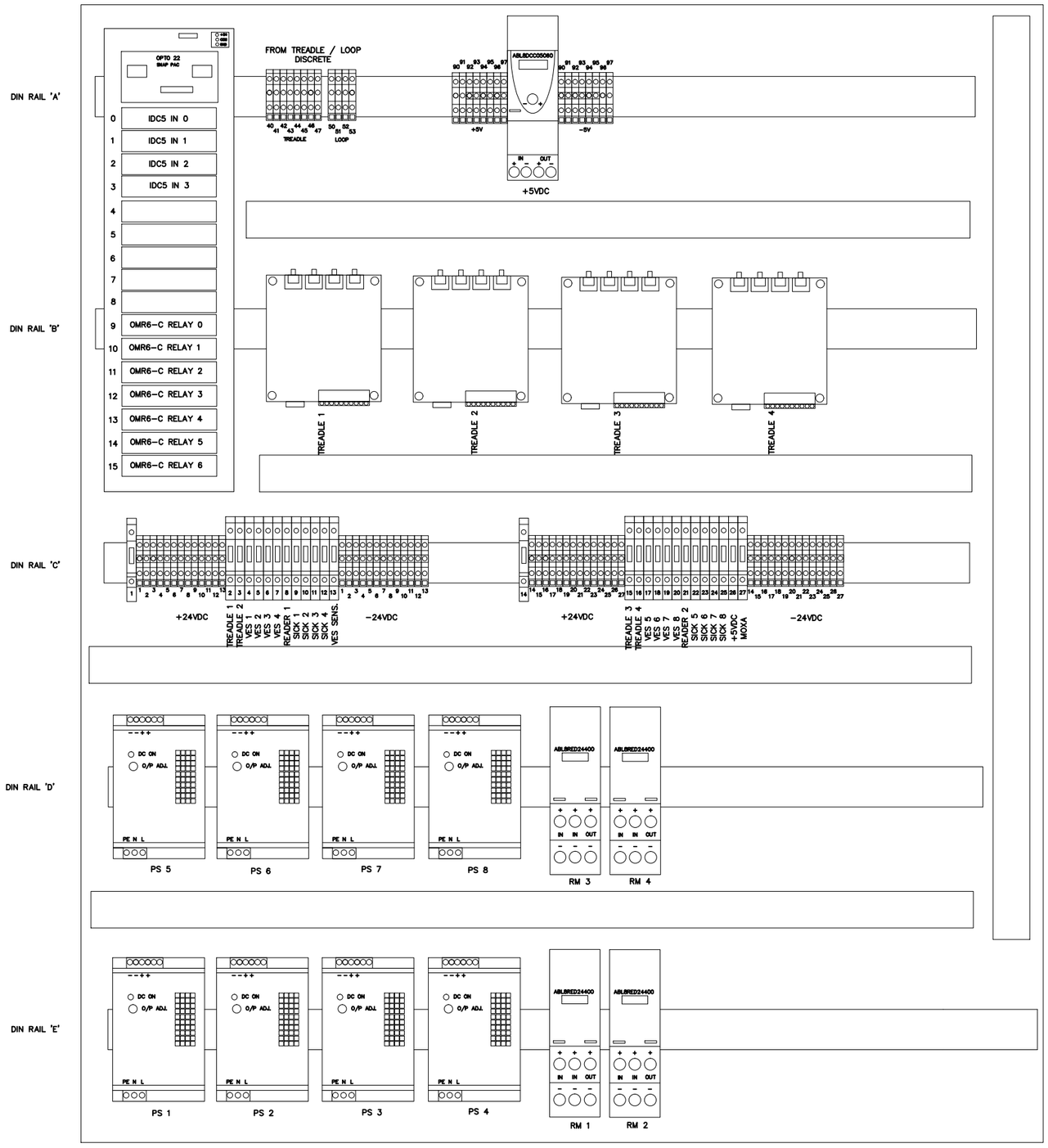

PRELIMINARY / DRAFT

FOR REVIEW ONLY. NOT FOR BUILD OR DESIGN WITHOUT APPROVAL BY AUTHORIZED REPRESENTATIVE OF SCHNEIDER ELECTRIC.

SCHNEIDER ELECTRIC
211 E SEVENTH STREET, SUITE 800, AUSTIN, TEXAS 78701

TELVENT is part of Schneider Electric

NETRMA
RETROFIT
POWER & I/O PANEL
MAINLANE

DATE: 02/26/2014 SHEET 16 OF 33 SHEETS

DESIGNED BY: T.HAMMOND	**CONFIDENTIAL:** THIS DOCUMENT AND THE INFORMATION CONTAINED IN IT ARE CONFIDENTIAL AND CANNOT BE COPIED OR DISCLOSED IN WHOLE OR IN PART WITHOUT THE EXPRESS WRITTEN CONSENT OF **SCHNEIDER ELECTRIC.**
DRAWN BY: T.HAMMOND	
CHECKED BY:	

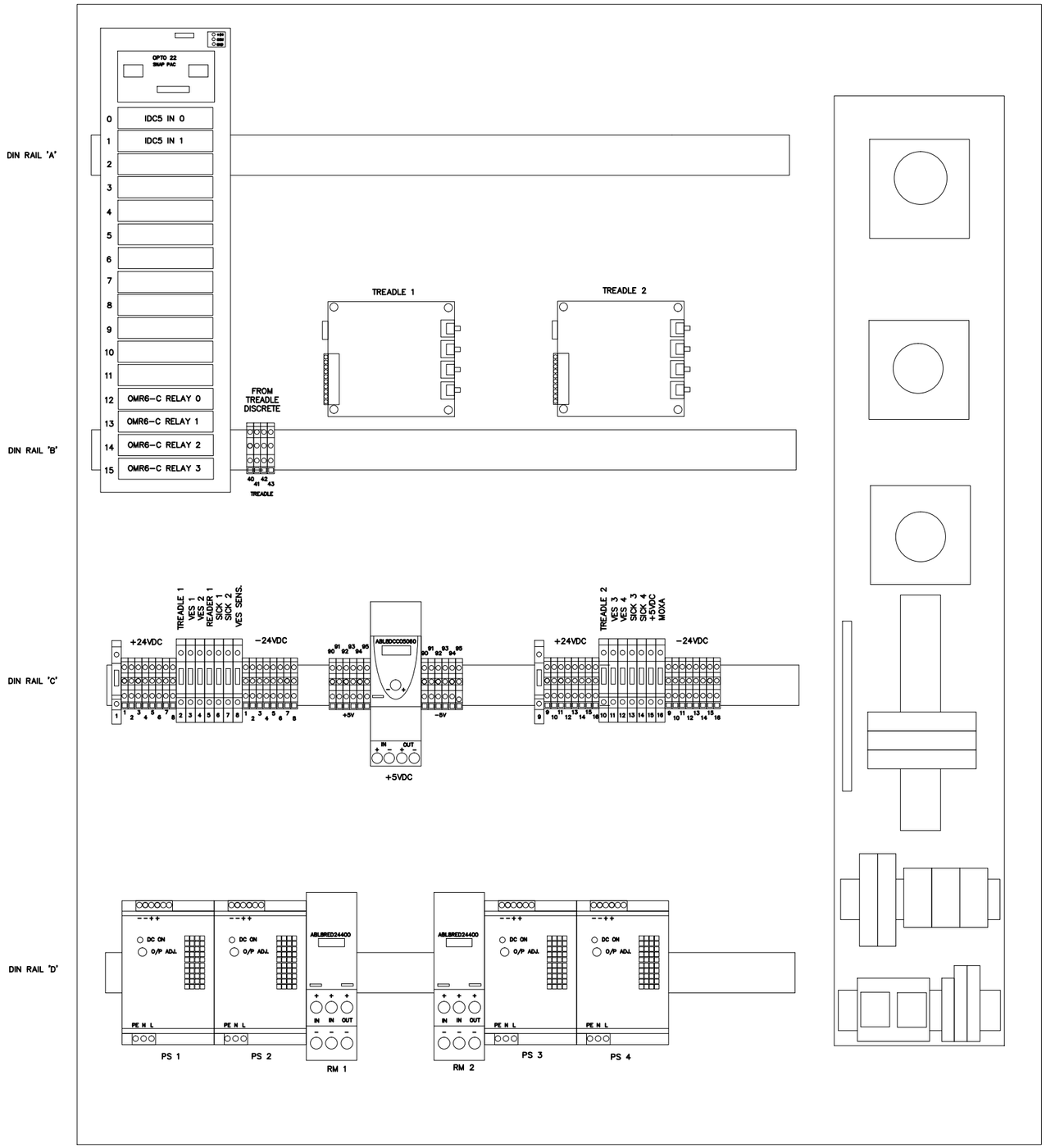

PRELIMINARY / DRAFT

FOR REVIEW ONLY. NOT FOR BUILD OR DESIGN WITHOUT APPROVAL BY AUTHORIZED REPRESENTATIVE OF SCHNEIDER ELECTRIC.

SCHNEIDER ELECTRIC
211 E SEVENTH STREET, SUITE 800, AUSTIN, TEXAS 78701

NETRMA
RETROFIT
POWER & I/O PANEL
RAMP

DATE: 02/26/2014 SHEET 17 OF 33 SHEETS

DESIGNED BY: T.HAMMOND	**CONFIDENTIAL:** THIS DOCUMENT AND THE INFORMATION CONTAINED IN IT ARE CONFIDENTIAL AND CANNOT BE COPIED OR DISCLOSED IN WHOLE OR IN PART WITHOUT THE EXPRESS WRITTEN CONSENT OF **SCHNEIDER ELECTRIC.**
DRAWN BY: T.HAMMOND	
CHECKED BY:	

MAINLANE POWER SUPPLY WIRING								
PDU #	PDU OUTPUT PORT	POWER SUPPLY #	POWER SUPPLY OUTPUT	RED. MOD. #	RED. MOD. INPUT	RED. MOD. OUTPUT	+24 VDC FUSED TERMINAL BLOCK #	−24 VDC TERMINAL BLOCK #
1	1	1	NEG. (−)	1	IN − (LEFT)	OUT −	N/A	1
			POS. (+)		IN + (LEFT)			
	2	2	NEG. (−)		IN − (CTR)	OUT +	1	N/A
			POS. (+)		IN + (CTR)			
	3	3	NEG. (−)	2	IN − (LEFT)	OUT −	N/A	1
			POS. (+)		IN + (LEFT)			
	4	4	NEG. (−)		IN − (CTR)	OUT +	1	N/A
			POS. (+)		IN + (CTR)			
2	1	5	NEG. (−)	3	IN − (LEFT)	OUT −	N/A	14
			POS. (+)		IN + (LEFT)			
	2	6	NEG. (−)		IN − (CTR)	OUT +	14	N/A
			POS. (+)		IN + (CTR)			
	3	7	NEG. (−)	4	IN − (LEFT)	OUT −	N/A	14
			POS. (+)		IN + (LEFT)			
	4	8	NEG. (−)		IN − (CTR)	OUT +	14	N/A
			POS. (+)		IN + (CTR)			

RAMP POWER SUPPLY WIRING								
PDU #	PDU OUTPUT PORT	POWER SUPPLY #	POWER SUPPLY OUTPUT	RED. MOD. #	RED. MOD. INPUT	RED. MOD. OUTPUT	+24 VDC FUSED TERMINAL BLOCK #	−24 VDC TERMINAL BLOCK #
1	1	1	NEG. (−)	1	IN − (LEFT)	OUT −	N/A	1
			POS. (+)		IN + (LEFT)			
	2	2	NEG. (−)		IN − (CTR)	OUT +	1	N/A
			POS. (+)		IN + (CTR)			
2	1	3	NEG. (−)	2	IN − (LEFT)	OUT −	N/A	9
			POS. (+)		IN + (LEFT)			
	2	4	NEG. (−)		IN − (CTR)	OUT +	9	N/A
			POS. (+)		IN + (CTR)			

SNAP POWER WIRING			
+5 VDC TERMINAL BLOCK	−5 VDC TERMINAL BLOCK	SNAP CNTRLLER INPUT PIN NAME	SNAP CNTRLLER INPUT PIN #
91	N/A	+24	1
N/A	91	COM	2
N/A	N/A	GND	3

NOTES:

1. THE CONNECTION FROM THE PDU TO THE POWER SUPPLY IS A TRIPP LITE P005−06−RD CABLE. STRIP THE RECEPTACLE END OFF THE TRIPP LITE P005−06−RD CABLE AND HARDWIRE THE CONDUCTORS TO THE POWER SUPPLY. SEE THE POWER SUPPLY INPUT WIRING TABLE (THIS SHEET) FOR THE POWER SUPPLY CONNECTIONS.

2. SEE MAINLANE POWER AND I/O PANEL SHEET FOR MAINLANE COMPONENT PLACEMENT AND IDENTIFICATION.

3. SEE RAMP POWER AND I/O PANEL SHEET FOR RAMP COMPONENT PLACEMENT AND IDENTIFICATION.

4. SEE THE MAINLANE AND RAMP ELEVATION DETAIL SHEETS FOR COMPONENT NUMBERING RELATIVE TO LANES.

POWER SUPPLY INPUT WIRING			
	PIN G	PIN L	PIN N
P005−06−RD WIRE	GREEN	BLACK	WHITE

PRELIMINARY / DRAFT

FOR REVIEW ONLY. NOT FOR BUILD OR DESIGN WITHOUT APPROVAL BY AUTHORIZED REPRESENTATIVE OF SCHNEIDER ELECTRIC.

SCHNEIDER ELECTRIC
211 E SEVENTH STREET, SUITE 800, AUSTIN, TEXAS 78701

NETRMA
RETROFIT POWER WIRING DETAIL

DATE: 02/26/2014

DESIGNED BY: T.HAMMOND
DRAWN BY: T.HAMMOND
CHECKED BY:

CONFIDENTIAL: THIS DOCUMENT AND THE INFORMATION CONTAINED IN IT ARE CONFIDENTIAL AND CANNOT BE COPIED OR DISCLOSED IN WHOLE OR IN PART WITHOUT THE EXPRESS WRITTEN CONSENT OF **SCHNEIDER ELECTRIC.**

MAINLANE OMR6–C LOW VOLTAGE CONNECTION TABLE										
COMPONENT	LANE #	GANTRY	LICENSE PLATE	+24VDC BLOCK #	SNAP CHANNEL #	OMR6–C CHANNEL #	OMR6–C INPUT PIN #	OMR6–C OUTPUT PIN #	+24VDC FUSED BLOCK #	–24VDC BLOCK #
24VDC INPUT	N/A	N/A	N/A	1	N/A	N/A	N/A	N/A	1	1
TREADLE CARD 1	2	EXIT	N/A	2	9	0	C	NC	2	2
TREADLE CARD 2	2	EXIT	N/A	3		1	C	NC	3	3
VES CAMERA	1	EXIT	FRONT	4		2	C	NC	4	4
VES CAMERA	2	EXIT	FRONT	5		3	C	NC	5	5
VES CAMERA	3	EXIT	FRONT	6	10	0	C	NC	6	6
VES CAMERA	4	EXIT	FRONT	7		1	C	NC	7	7
AVI READER	2	EXIT	N/A	8		2	C	NC	8	8
AVC SCANNER	1	ENTRY	FRONT	9		3	C	NC	9	9
AVC SCANNER	2	ENTRY	FRONT	10	11	0	C	NC	10	10
AVC SCANNER	3	ENTRY	FRONT	11		1	C	NC	11	11
AVC SCANNER	4	ENTRY	FRONT	12		2	C	NC	12	12
VES SENSOR	1	ENTRY	N/A	13		3	C	NC	13	13
24VDC INPUT	N/A	N/A	N/A	14	N/A	N/A	N/A	N/A	14	14
TREADLE CARD 3	3	ENTRY	N/A	15	12	0	C	NC	15	15
TREADLE CARD 4	3	ENTRY	N/A	16		1	C	NC	16	16
VES CAMERA	1	ENTRY	REAR	17		2	C	NC	17	17
VES CAMERA	2	ENTRY	REAR	18		3	C	NC	18	18
VES CAMERA	3	ENTRY	REAR	19	13	0	C	NC	19	19
VES CAMERA	4	ENTRY	REAR	20		1	C	NC	20	20
AVI READER	3	ENTRY	N/A	21		2	C	NC	21	21
AVC SCANNER	1	EXIT	REAR	22		3	C	NC	22	22
AVC SCANNER	2	EXIT	REAR	23	14	0	C	NC	23	23
AVC SCANNER	3	EXIT	REAR	24		1	C	NC	24	24
AVC SCANNER	4	EXIT	REAR	25		2	C	NC	25	25
NOT USED	N/A	N/A	N/A	26		3	C	NC	26	26
MOXA	N/A	N/A	N/A	27	15	0	C	NC	27	27

RAMP OMR6–C LOW VOLTAGE CONNECTION TABLE										
COMPONENT	LANE #	GANTRY	LICENSE PLATE	+24VDC BLOCK #	OMR6–C MODULE #	OMR6–C CHANNEL #	OMR6–C INPUT PIN #	OMR6–C OUTPUT PIN #	+24VDC FUSED BLOCK #	–24VDC BLOCK #
24VDC INPUT	N/A	N/A	N/A	1	N/A	N/A	N/A	N/A	1	1
TREADLE CARD 1	2	EXIT	N/A	2	12	0	C	NC	2	2
VES CAMERA	1	EXIT	FRONT	3		1	C	NC	3	3
VES CAMERA	2	EXIT	FRONT	4		2	C	NC	4	4
AVI READER	2	EXIT	N/A	5		3	C	NC	5	5
AVC SCANNER	1	ENTRY	FRONT	6	13	0	C	NC	6	6
AVC SCANNER	2	ENTRY	FRONT	7		1	C	NC	7	7
VES SENSOR	1	ENTRY	N/A	8		2	C	NC	8	8
24VDC INPUT	N/A	N/A	N/A	9	N/A	N/A	N/A	N/A	9	9
TREADLE CARD 2	2	EXIT	N/A	10	13	3	C	NC	10	10
VES CAMERA	1	ENTRY	REAR	11	14	0	C	NC	11	11
VES CAMERA	2	ENTRY	REAR	12		1	C	NC	12	12
AVC SCANNER	1	EXIT	REAR	13		2	C	NC	13	13
AVC SCANNER	2	EXIT	REAR	14		3	C	NC	14	14
NOT USED	N/A	N/A	N/A	15	15	0	C	NC	15	15
MOXA	N/A	N/A	N/A	16		1	C	NC	16	16

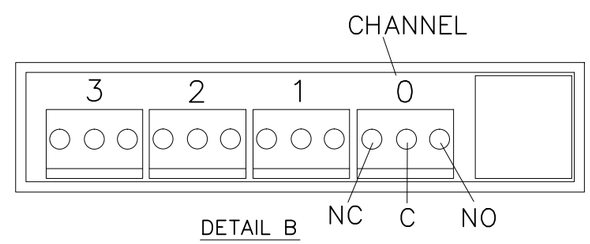

DETAIL B

OMR6–C RELAY MODULE NUMBERING DETAIL – OLD STYLE

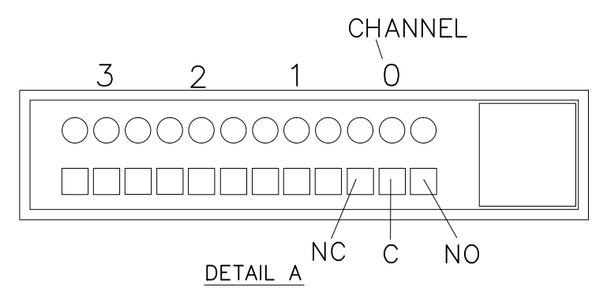

DETAIL A

OMR6–C RELAY MODULE NUMBERING DETAIL – NEW STYLE

NOTES:

1. BECAUSE THE MAINLANES ARE BI–DIRECTIONAL, THE GANTRIES ARE LABELED 'ENTRY' AND 'EXIT' TRAVELING FROM EAST TO WEST. THIS DOES NOT APPLY TO RAMPS.
2. SEE MAINLANE POWER AND I/O PANEL SHEET FOR MAINLANE COMPONENT PLACEMENT AND IDENTIFICATION.
3. SEE RAMP POWER AND I/O PANEL SHEET FOR RAMP COMPONENT PLACEMENT AND IDENTIFICATION.
4. SEE THE POWER AND I/O PANEL SHEETS FOR THE OMR6–C MODULE NUMBERING SCHEME.
5. ALL WIRE IS 18 AWG, STRANDED, 300–1000 VOLT, 80C.
6. ALL +24 VDC WIRING IS ORANGE.
7. ALL –24VDC WIRING IS BLACK.
8. SEE THE MAINLANE AND RAMP ELEVATION DETAIL SHEETS FOR COMPONENT NUMBERING RELATIVE TO LANES.

PRELIMINARY / DRAFT

FOR REVIEW ONLY. NOT FOR BUILD OR DESIGN WITHOUT APPROVAL BY AUTHORIZED REPRESENTATIVE OF SCHNEIDER ELECTRIC.

SCHNEIDER ELECTRIC
211 E SEVENTH STREET, SUITE 800, AUSTIN, TEXAS 78701

NETRMA

RETROFIT
OMR6–C POWER RELAY
WIRING DETAIL

DATE: 02/26/2014 SHEET 19 OF 33 SHEETS

DESIGNED BY: T.HAMMOND
DRAWN BY: T.HAMMOND
CHECKED BY:

CONFIDENTIAL: THIS DOCUMENT AND THE INFORMATION CONTAINED IN IT ARE CONFIDENTIAL AND CANNOT BE COPIED OR DISCLOSED IN WHOLE OR IN PART WITHOUT THE EXPRESS WRITTEN CONSENT OF **SCHNEIDER ELECTRIC.**

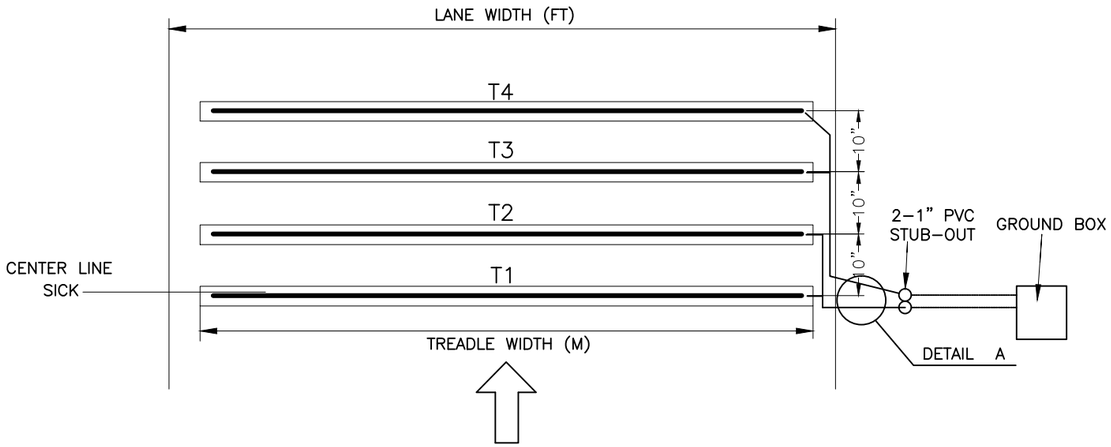

TYPICAL TREADLE BED INSTALLATION
PLAN VIEW

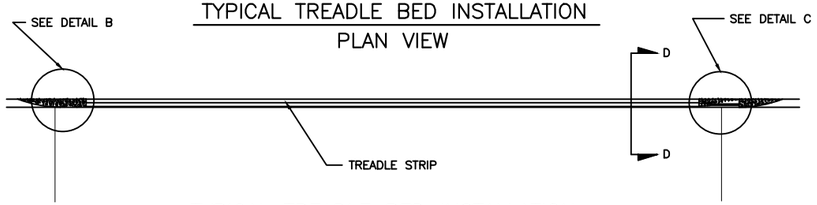

TYPICAL TREADLE BED INSTALLATION
ELEVATION VIEW

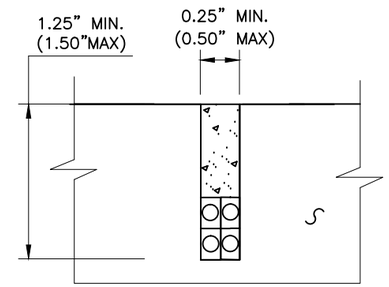

DETAIL A
TREADLE FEEDER CABLE PLACEMENT/HOME RUN SAW CUT DIMENSIONS

TREADLE WIDTH DETAILS						
ZONE	LANE	LANE WIDTH (FT)	LANE WIDTH (M)	TREADLE WIDTH (FT)	TREADLE WIDTH (M)	FEEDER CABLE LENGTH (M)
SH 31 ML	2	12'–0"	3.7	11'–6"	3.5	35
	3	12'–0"	3.7	11'–6"	3.5	35
SALINE ML	2	12'–0"	3.7	11'–6"	3.5	35
	3	12'–0"	3.7	11'–6"	3.5	35
FM 2493 WB	2	14'–0"	4.3	13'–1"	4.0	35
FM 2493 EB	2	14'–0"	4.3	13'–1"	4.0	35
FM 756 WB	2	14'–0"	4.3	13'–1"	4.0	35
FM 756 EB	2	13'–10"	4.2	13'–1"	4.0	35
SH 110 ML	2	12'–0"	3.7	11'–6"	3.5	35
	3	12'–0"	3.7	11'–6"	3.5	35

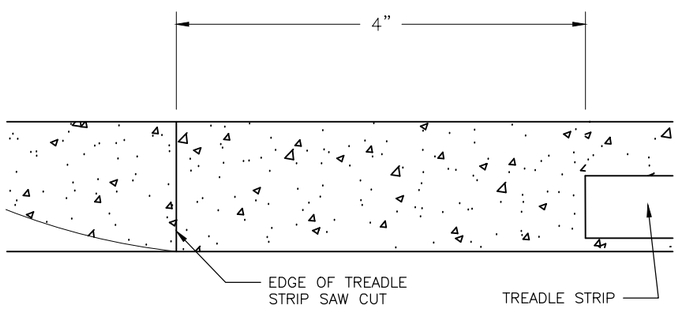

DETAIL B
END OF TREADLE STRIP AND TREADLE STRIP SAW CUT

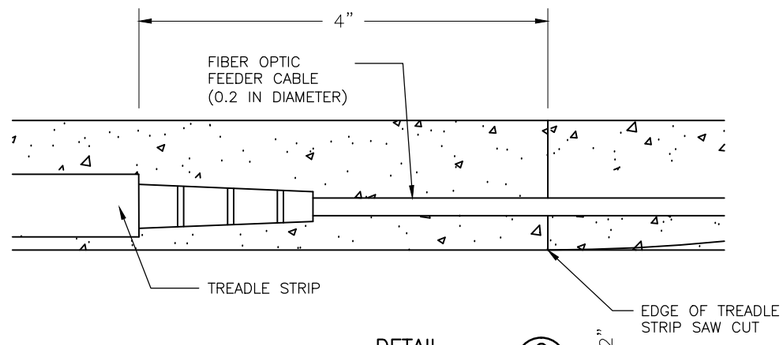

DETAIL C
TREADLE CONNECTION

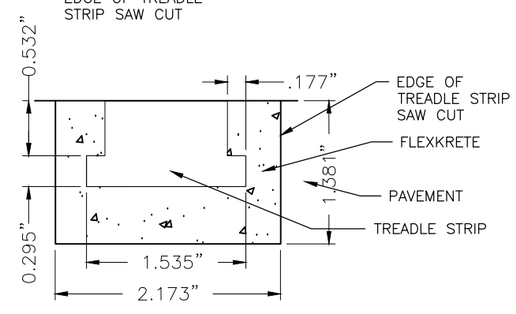

DETAIL D–D
TREADLE STRIP PLACEMENT/SAW CUT DIMENSIONS

NOTES:

1. CENTER OF TREADLE STRIPS ALIGNED TO CENTERLINE OF TRAVEL LANE, 10" APART.
2. TREADLE STRIP SAW CUTS TO BE A MINIMUM OF 2 ¼" WIDE X 1 ¼" DEEP AND A MAXIMUM OF 2½" WIDE x 1½" DEEP.
3. HOME RUN SAW–CUTS FOR TREADLE FEEDER CABLE ARE TO HAVE 45 DEGREE CORNERS CUTS. NO 90 DEGREE CORNERS SHALL BE USED IN TREADLE FEEDER HOME RUN.
4. SAW CUT AND AREA WITHIN 6" OF THE SAW CUT TO BE POWER WASHED AND SWEPT CLEAN, THEN DRIED COMPLETELY WITH COMPRESSED AIR BEFORE TREADLE STRIP INSTALLATION BEGINS. AREA MUST BE CLEAN AND DRY TO ENSURE FLEXKRETE ADHESION TO SURFACE.
5. IN THE FINAL INSTALLED CONFIGURATION, VERSAFLEX AND FLEXCRETE TO BE FLUSH WITH TOP OF PAVEMENT.
6. ALL HOME RUN SAW–CUTS TO BE INSTALLED AS PER DETAIL 1.

PRELIMINARY / DRAFT

FOR REVIEW ONLY. NOT FOR BUILD OR DESIGN WITHOUT APPROVAL BY AUTHORIZED REPRESENTATIVE OF SCHNEIDER ELECTRIC.

SCHNEIDER ELECTRIC
211 E SEVENTH STREET, SUITE 800, AUSTIN, TEXAS 78701

NETRMA
RETROFIT
TREADLE
INSTALL DETAIL

DATE: 02/26/2014 SHEET 20 OF 33 SHEETS

DESIGNED BY: T.HAMMOND
DRAWN BY: T.HAMMOND
CHECKED BY:

CONFIDENTIAL: THIS DOCUMENT AND THE INFORMATION CONTAINED IN IT ARE CONFIDENTIAL AND CANNOT BE COPIED OR DISCLOSED IN WHOLE OR IN PART WITHOUT THE EXPRESS WRITTEN CONSENT OF **SCHNEIDER ELECTRIC.**

MAINLANE TREADLE CARD INPUT WIRING						
LANE #	TREADLE CARD #	TREADLE INPUT PIN NAME	TREADLE INPUT PIN #	+24 VDC FUSED TERMINAL BLOCK #	−24 VDC TERMINAL BLCOK #	+5 VDC TERMINAL BLOCK #
2	1	+12..24VDC	0	2	N/A	N/A
		GND	1	N/A	2	N/A
		TRG2+	7	N/A	N/A	92
		TRG1+	9	N/A	N/A	92
	3	+12..24VDC	0	17	N/A	N/A
		GND	1	N/A	17	N/A
		TRG2+	7	N/A	N/A	93
		TRG1+	9	N/A	N/A	93
3	2	+12..24VDC	0	3	N/A	N/A
		GND	1	N/A	3	N/A
		TRG2+	7	N/A	N/A	94
		TRG1+	9	N/A	N/A	94
	4	+12..24VDC	0	18	N/A	N/A
		GND	1	N/A	18	N/A
		TRG2+	7	N/A	N/A	95
		TRG1+	9	N/A	N/A	95

MAINLANE TREADLE CARD OUTPUT WIRING							
LANE #	TREADLE CARD #	TREADLE OUTPUT PIN NAME	TREADLE OUTPUT PIN #	INPUT TERMINAL BLOCK #	INPUT TERMINAL BLOCK COLOR	IDC5 INPUT MODULE #	IDC5 INPUT PIN #
2	1	TRG1−	8	40		0	1
		TRG2−	6	41			3
	3	TRG1−	8	42		1	1
		TRG2−	6	43			3
3	2	TRG1−	8	44		0	5
		TRG2−	6	45			7
	4	TRG1−	8	46		1	5
		TRG2−	6	47			7

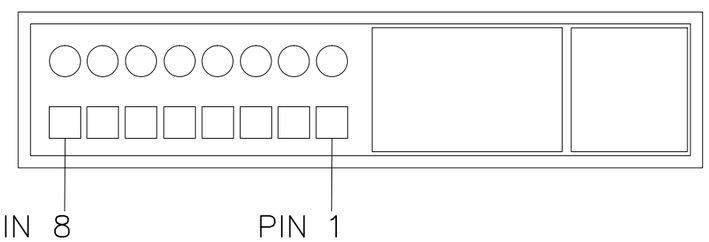

DETAIL A
IDC5 INPUT MODULE NUMBERING DETAIL

NOTES:

1. INSTALL A JUMPER ACROSS TREADLE PINS 9 AND 7 FOR THE +5 VDC TREADLE INPUT WIRING.

2. SEE MAINLANE POWER AND I/O PANEL SHEET FOR MAINLANE COMPONENT PLACEMENT AND IDENTIFICATION.

3. SEE RAMP POWER AND I/O PANEL SHEET FOR RAMP COMPONENT PLACEMENT AND IDENTIFICATION.

4. SEE THE POWER AND I/O PANEL SHEETS FOR THE IDC5 MODULE NUMBERING SCHEMES.

5. need a note about the negative wire on pins 2, 4, 6, 8.

6. ALL WIRE IS 18 AWG, STRANDED, 300−1000 VOLT, 80C.

7. SEE THE MAINLANE AND RAMP ELEVATION DETAIL SHEETS FOR COMPONENT NUMBERING RELATIVE TO LANES.

RAMP TREADLE CARD INPUT WIRING						
LANE #	TREADLE CARD #	INPUT PIN NAME	INPUT PIN #	+24 VDC FUSED TERMINAL BLOCK #	−24 VDC TERMINAL BLCOK #	+5 VDC TERMINAL BLOCK #
2	1	+12..24VDC	0	2	N/A	N/A
		GND	1	N/A	2	N/A
		TRG2+	7	N/A	N/A	92
		TRG1+	9	N/A	N/A	92
	2	+12..24VDC	0	17	N/A	N/A
		GND	1	N/A	17	N/A
		TRG2+	7	N/A	N/A	93
		TRG1+	9	N/A	N/A	93

RAMP TREADLE CARD OUTPUT WIRING							
LANE #	TREADLE CARD #	OUTPUT PIN NAME	OUTPUT PIN #	INPUT TERMINAL BLOCK #	INPUT TERMINAL BLOCK COLOR	IDC5 INPUT MODULE #	IDC5 INPUT PIN #
2	1	TRG1−	8	40		0	1
		TRG2−	6	41			3
	2	TRG1−	8	42		1	1
		TRG2−	6	43			3

PRELIMINARY / DRAFT
FOR REVIEW ONLY. NOT FOR BUILD OR DESIGN WITHOUT APPROVAL BY AUTHORIZED REPRESENTATIVE OF SCHNEIDER ELECTRIC.

SCHNEIDER ELECTRIC
211 E SEVENTH STREET, SUITE 800, AUSTIN, TEXAS 78701

NETRMA
RETROFIT TREADLE WIRING DETAIL

DATE: 02/26/2014 SHEET 21 OF 33 SHEETS

DESIGNED BY: T.HAMMOND
DRAWN BY: T.HAMMOND
CHECKED BY:

CONFIDENTIAL: THIS DOCUMENT AND THE INFORMATION CONTAINED IN IT ARE CONFIDENTIAL AND CANNOT BE COPIED OR DISCLOSED IN WHOLE OR IN PART WITHOUT THE EXPRESS WRITTEN CONSENT OF **SCHNEIDER ELECTRIC.**

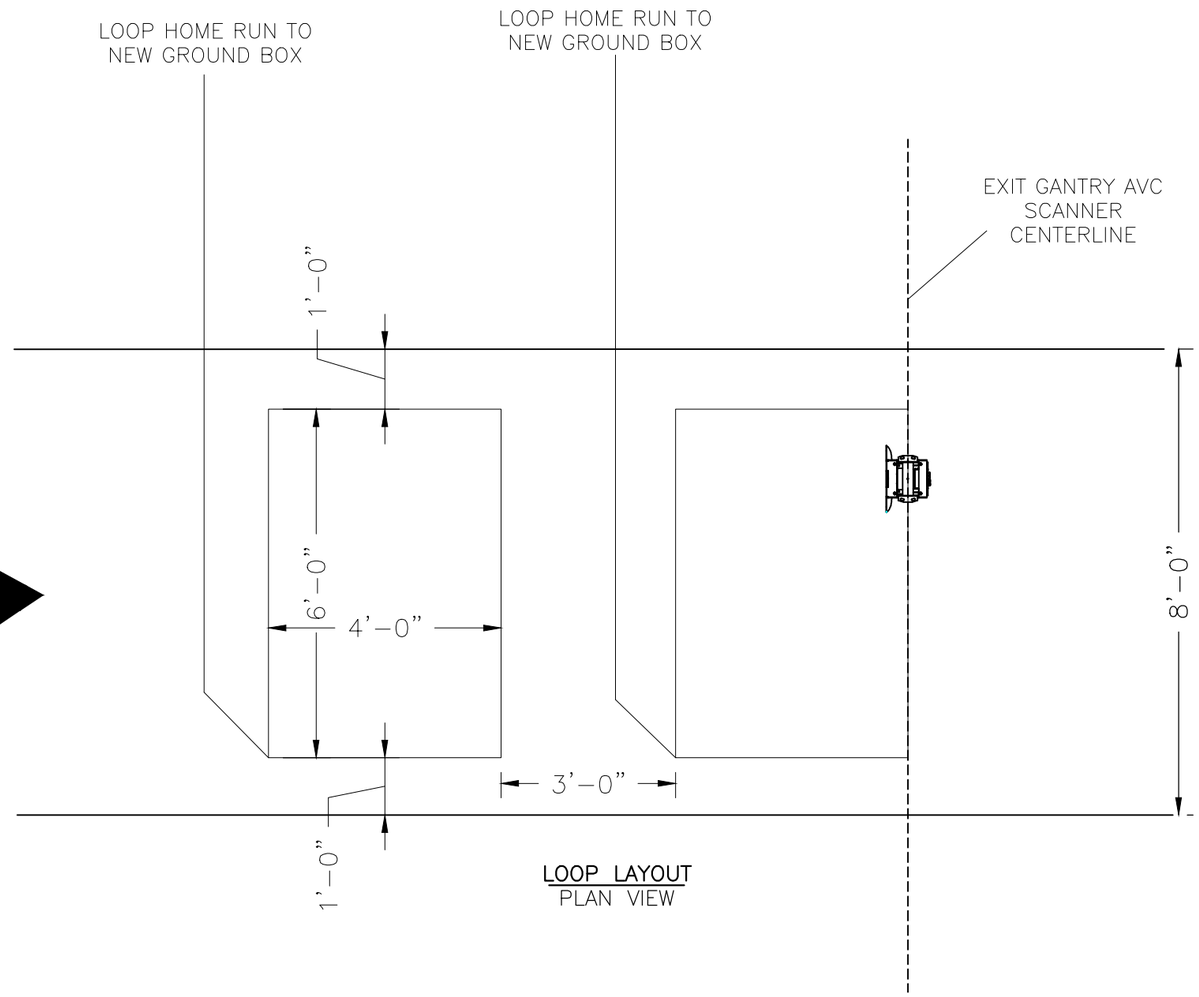

1/4

LOOP LAYOUT
PLAN VIEW

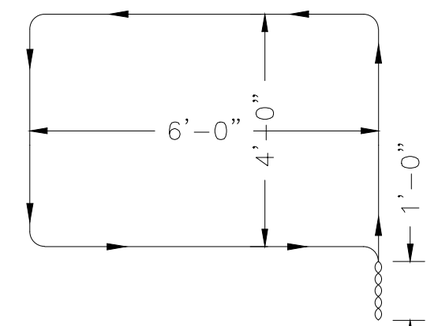

LOOP DETAIL
LOOP PLACEMENT/SAW CUT DIMENSIONS
PLAN VIEW

LOOP DETAIL
LOOP PLACEMENT/SAW CUT DIMENSIONS
ELEVATION VIEW

NOTES:

1. LOOPS ARE INSTALLED AT MAINLANE ZONES IN SHOULDERS ONLY.
2. RECORD LOOP DIMENSIONS AS CUT TO THE NEAREST $\frac{1}{4}$" BEFORE FILLING CUTS.
3. START OF LOOP SHALL ALWAYS BE CONNECTED TO WHITE/CLEAR CONDUCTOR OF LOOP LEAD-IN CABLE.
4. FEEDERS MUST RUN IN DIFFERENT SLOTS.
5. USE FOUR TURNS PER LOOP IN LOOP SLOT.
6. USE FIVE TWISTS PER FOOT IN LOOP LEAD-IN CABLE.
7. SAW CUT AND AREA WITHIN 6" OF THE SAW CUT TO BE POWER WASHED AND SWEPT CLEAN, THEN DRIED COMPLETELY WITH COMPRESSED AIR BEFORE LOOP INSTALLATION BEGINS. AREA MUST BE CLEAN AND DRY TO ENSURE SEALANT ADHESION TO SURFACE.

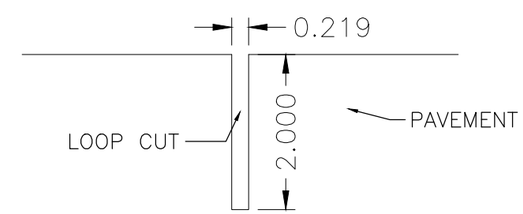

DETAIL (A-A)
LOOP PLACEMENT/SAW CUT DIMENSIONS

PRELIMINARY / DRAFT
FOR REVIEW ONLY. NOT FOR BUILD OR DESIGN WITHOUT APPROVAL BY AUTHORIZED REPRESENTATIVE OF SCHNEIDER ELECTRIC.

SCHNEIDER ELECTRIC
211 E SEVENTH STREET, SUITE 800, AUSTIN, TEXAS 78701

NETRMA
RETROFIT
LOOP
INSTALL DETAIL

DATE: 02/26/2014 SHEET 22 OF 33 SHEETS

DESIGNED BY: T.HAMMOND	CONFIDENTIAL: THIS DOCUMENT AND THE INFORMATION CONTAINED IN IT ARE CONFIDENTIAL AND CANNOT BE COPIED OR DISCLOSED IN WHOLE OR IN PART WITHOUT THE EXPRESS WRITTEN CONSENT OF SCHNEIDER ELECTRIC.
DRAWN BY: T.HAMMOND	
CHECKED BY:	

MAINLANE LOOP INPUT WIRING					
LANE #	LOOP CARD #	LOOP INPUT PIN NAME	LOOP INPUT PIN #	LOOP	−5 VDC TERMINAL BLOCK #
1	1	CH. 1 COLL.	1	ENTRY	N/A
		CH. 2 COLL.	3	EXIT	N/A
		GRND	5	N/A	96
4	2	CH. 1 COLL.	1	ENTRY	N/A
		CH. 2 COLL.	3	EXIT	N/A
		GRND	5	N/A	97

MAINLANE LOOP OUTPUT WIRING							
LANE #	LOOP CARD #	LOOP OUTPUT PIN NAME	LOOP OUTPUT PIN #	INPUT TERMINAL BLOCK #	INPUT TERMINAL BLOCK COLOR	IDC5 INPUT MODULE #	IDC5 INPUT PIN #
1	1	CH. 1 EMIT.	2	50		2	1
		CH. 2 EMIT.	4	51			3
4	2	CH. 1 EMIT.	2	52		3	1
		CH. 2 EMIT.	4	53			3

NOTES:

1. INSTALL LOOP CARDS IN NORTHSTAR RACK AND NUMBER FROM LEFT TO RIGHT (CARD ONE ON THE LEFT, CARD TWO ON THE RIGHT). THE CARDS CANNOT BE INSTALLED IN ADJACENT SLOTS.

2. SEE MAINLANE POWER AND I/O PANEL SHEET FOR MAINLANE COMPONENT PLACEMENT AND IDENTIFICATION.

3. SEE THE POWER AND I/O PANEL SHEETS FOR THE IDC5 MODULE NUMBERING SCHEMES.

4. SEE THE MAINLANE AND RAMP ELEVATION DETAIL SHEETS FOR COMPONENT NUMBERING RELATIVE TO LANES.

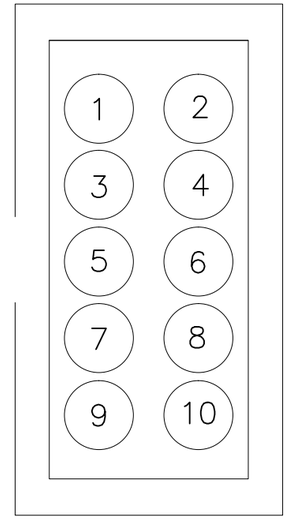

DETAIL A
NR−19 LOOP RACK 10−PIN OUTPUT CONNECTOR

PRELIMINARY / DRAFT
FOR REVIEW ONLY. NOT FOR BUILD OR DESIGN WITHOUT APPROVAL BY AUTHORIZED REPRESENTATIVE OF SCHNEIDER ELECTRIC.

SCHNEIDER ELECTRIC
211 E SEVENTH STREET, SUITE 800, AUSTIN, TEXAS 78701

NETRMA
RETROFIT
LOOP
WIRING DETAIL

DATE: 02/26/2014 SHEET 23 OF 33 SHEETS

DESIGNED BY: T.HAMMOND
DRAWN BY: T.HAMMOND
CHECKED BY:

CONFIDENTIAL: THIS DOCUMENT AND THE INFORMATION CONTAINED IN IT ARE CONFIDENTIAL AND CANNOT BE COPIED OR DISCLOSED IN WHOLE OR IN PART WITHOUT THE EXPRESS WRITTEN CONSENT OF **SCHNEIDER ELECTRIC.**

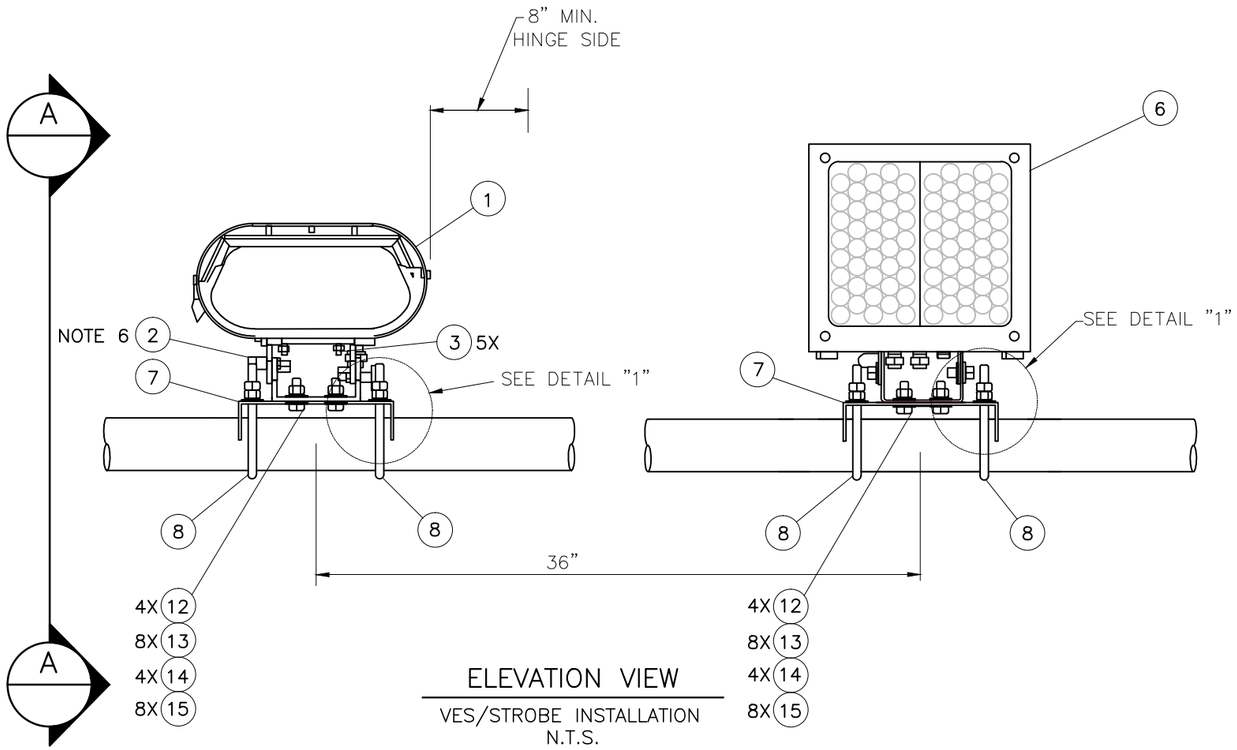

ELEVATION VIEW

VES/STROBE INSTALLATION
N.T.S.

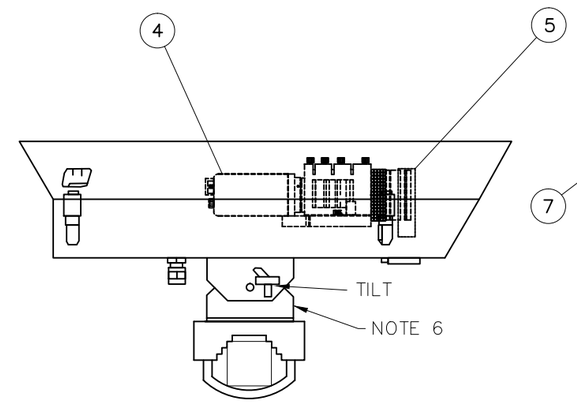

SECTION A

VES MOUNTED TO PIPE
N.T.S.

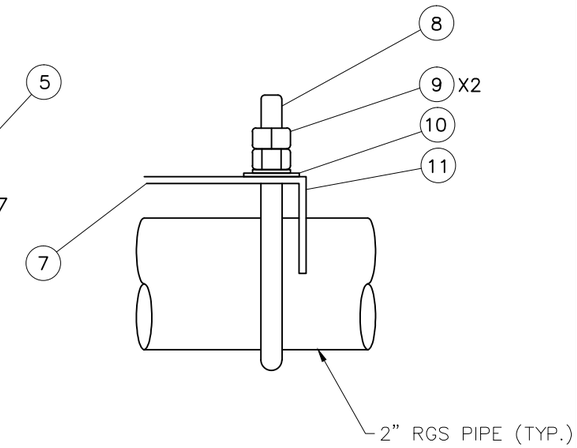

DETAIL 1

U-BOLT CONNECTION TO BRACKET
N.T.S.

NOTES:

1. SEE GANTRY ELEVATION DETAIL FOR DETAILED LOCATION OF EQUIPMENT ON TOLL HANGERS. RELATIVE TO OTHER EQUIPMENT.
2. ATTACH STROBE TO CAMERA MOUNTING BRACKET USING FOUR (4) 1" HEX BOLTS, FLAT WASHERS, LOCK WASHERS, AND HEX NUTS.
3. ATTACH THE STROBE MOUNTING BRACKET (WITH STROBE ATTACHED) ON THE 2" PIPE USING THE U-BOLT, WASHERS, LOCK WASHERS AND NUTS PER DETAIL A. ENSURE THAT THE MOUNTING BRACKET IS APPROXIMATELY HORIZONTAL.
4. ROUTE THE STROBE TRIGGER CABLE (NOT SHOWN) TO CAMERA IN ACCORDANCE WITH FIELD WIRING DRAWINGS.
5. ALIGN THE CAMERA ENCLOSURE MOUNTING SURFACE WITH THE HOLE PATTERN OF THE PAN/TILT/ROLL VIS-CAM MOUNT AND SECURE IT TO THE CAMERA MOUNT WITH THE FIVE PROVIDED ¼-20 HEX BOLTS.
6. REMOVE YAW/ROLL LOWER BRACKET ASSEMBLY-NOT NEEDED IN THIS INSTALLATION.
7. ATTACH THE VIS-CAM MOUNT (WITH ATTACHED CAMERA ENCLOSURE) TO CAMERA BRACKET USING 1/4"-20 BOLTS, FLAT WASHERS ON EITHER SIDE OF CAMERA BRACKET, LOCKING WASHERS AND DOUBLE NUTS.
8. ATTACH THE CAMERA TO THE INTERNAL CAMERA/LENS MOUNT AND INSTALL IN THE CAMERA ENCLOSURE.
9. ATTACH THE MOUNTING BRACKET (WITH CAMERA ATTACHED) ON THE 2" PIPE USING THE U-BOLT, WASHERS, LOCK WASHERS AND DOUBLE NUTS PER DETAIL A. ENSURE THAT THE MOUNTING BRACKET IS APPROXIMATELY HORIZONTAL.
10. ROUTE THE CAMERA END OF THE CABLE AND THE CAMERA-STROBE CABLE (NOT SHOWN) ACCORDING TO LOCAL ELECTRICAL CODE REQUIREMENTS TO THE CAMERA AND STROBE HOUSINGS. TERMINATE CABLE IN ACCORDANCE WITH FIELD WIRING DRAWINGS.
11. ALIGN THE STROBE AND CAMERA ANGLES IN ACCORDANCE WITH JAI INSTALLATION PROCEDURES TO ENSURE THAT THE IMAGE AND ILLUMINATION ARE POINTED AT THE TRIGGER POINT AND ADJUST THE FOCUS OF THE CAMERA ON THE TRIGGER POINT.

ITEM NO.	QTY REQ'D	PART OR IDENTIFYING NUMBER	NOMENCLATURE OR DESCRIPTION	MANUFACTURER
15	16	1136701	HEX NUT, GALVANIZED, 1/4"-20, GRADE A	FASTENAL
14	8	1133780	SPLIT LOCK WASHER, GALVANIZED, 1/4" MED FINISH	FASTENAL
13	16	1133180	FLAT WASHER, GALVANIZED, 1/4", USS	FASTENAL
12	8	1191804	HEX BOLT, GALVANIZED, 1/4"-20 x 1" ASTM A307A	FASTENAL
11	8	1133182	WASHER, FLAT, 3/8", GALVANIZED, USS	FASTENAL
10	8	1133782	WASHER, SPLIT LOCK, 3/8", GALVANIZED, MED FINISH	FASTENAL
9	16	36705	NUT, HEX, 3/8"-16 UNC, GALVANIZED, GRADE A	FASTENAL
8	4	11632-04401	U-BOLT, 3/8"-16 UNC, GALVANIZED, 6" LENGTH x 3.5" WIDTH	FASTENAL
7	2	BRKT-CAM2	BRACKET, PIPE MOUNTING, CAMERA/STROBE	SW STEEL
6	1	31015649	TRAFFIC NIGHT FLASH WITH 6FT CABLE, TNL-50 LED, BLUE	JAI
5	1	INCLUDED IN #1	LENS, VARIABLE 16-64MM, MEGAPIXEL	KOWA
4	1	TS-5000-EN INCLUDED IN #1	CAMERA, 1" PROGRESSIVE SCAN CCD, 2048 (H) X 1628 (V)	JAI
3	10	INCLUDED IN #1	BOLT, 1/4" HEX	JAI
2	1	INCLUDED IN #1	PAN/TILT/ROLL VIS-CAM MOUNT	JAI
1	1	31015847	CAMERA ASSEMBLY VIS-1000 AIO	JAI

PRELIMINARY / DRAFT

FOR REVIEW ONLY. NOT FOR BUILD OR DESIGN WITHOUT APPROVAL BY AUTHORIZED REPRESENTATIVE OF SCHNEIDER ELECTRIC.

SCHNEIDER ELECTRIC
211 E SEVENTH STREET, SUITE 800, AUSTIN, TEXAS 78701

NETRMA
RETROFIT VES CAMERA/STROBE MOUNT DETAIL

DATE: 02/26/2014 SHEET 24 OF 33 SHEETS

DESIGNED BY: T.HAMMOND
DRAWN BY: T.HAMMOND
CHECKED BY:

CONFIDENTIAL: THIS DOCUMENT AND THE INFORMATION CONTAINED IN IT ARE CONFIDENTIAL AND CANNOT BE COPIED OR DISCLOSED IN WHOLE OR IN PART WITHOUT THE EXPRESS WRITTEN CONSENT OF **SCHNEIDER ELECTRIC.**

VES CAMERA I/O BOARD (X4) WIRING DETAIL			
PIN #	COLOR	CABLE	SIGNAL
1	WHITE/ORANGE	CAT-6	ETH A+
2	ORANGE		ETH A-
3	WHITE/GREEN		ETH B+
4	GREEN		ETH B-
5	WHITE/BLUE	N/A	ETH C+
6	BLUE	N/A	ETH C-
7	WHITE/BROWN	N/A	ETH D+
8	BROWN	N/A	ETH D-
9		18 AWG 4-WIRE	GND
10			+24VDC
11			VINIT+
12			VINIT-
13	N/A	N/A	RS485D+
14	N/A	N/A	RS485D-
15	N/A	N/A	RS485D+
16	N/A	N/A	RS485D-

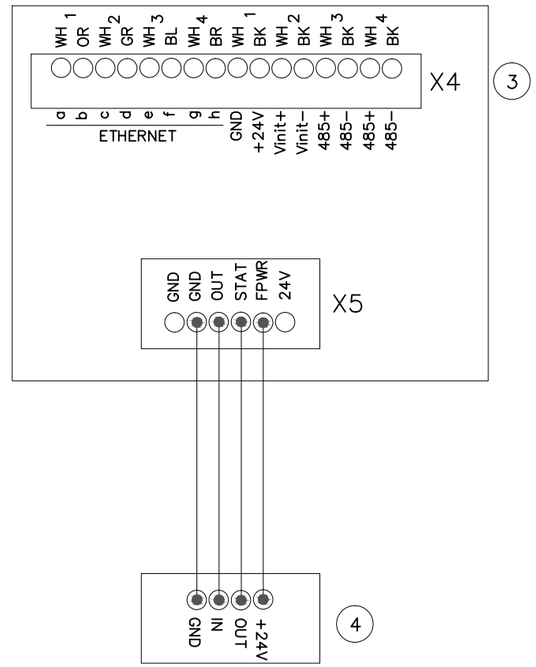

VES CAMERA I/O BOARD (X5) WIRING DETAIL			
PIN #	COLOR	CABLE	SIGNAL
1	N/A	N/A	IO BOARD GND
2		18 AWG 4-WIRE	FLASH GND
3			STROBE OUT
4			STROBE STATUS
5			FLASH POWER
6	N/A	N/A	IO BOARD +24V

VES STROBE I/O BOARD WIRING DETAIL			
PIN #	COLOR	CABLE	SIGNAL
1		18 AWG 4-WIRE	GROUND
2			STROBE IN
3			STROBE STATUS OUT
4			+24VDC

NOTES:

1. SEE OMR6-C WIRING DETAIL SHEET FOR VES CAMERA POWER CONNECTION TO SPECIFIC TERMINAL BLOCKS.

2. SEE NETWORK BLOCK DIAGRAM FOR VES CAMERA NETWORK CONNECTION TO SPECIFIC SWITCH.

3. VES CAMERA I/O BOARD.

4. VES STROBE I/O BOARD.

PRELIMINARY / DRAFT

FOR REVIEW ONLY. NOT FOR BUILD OR DESIGN WITHOUT APPROVAL BY AUTHORIZED REPRESENTATIVE OF SCHNEIDER ELECTRIC.

SCHNEIDER ELECTRIC
211 E SEVENTH STREET, SUITE 800, AUSTIN, TEXAS 78701

NETRMA
RETROFIT VES CAMERA/STROBE WIRING DETAIL

DATE: 02/26/2014

DESIGNED BY: T.HAMMOND
DRAWN BY: T.HAMMOND
CHECKED BY:

CONFIDENTIAL: THIS DOCUMENT AND THE INFORMATION CONTAINED IN IT ARE CONFIDENTIAL AND CANNOT BE COPIED OR DISCLOSED IN WHOLE OR IN PART WITHOUT THE EXPRESS WRITTEN CONSENT OF **SCHNEIDER ELECTRIC.**

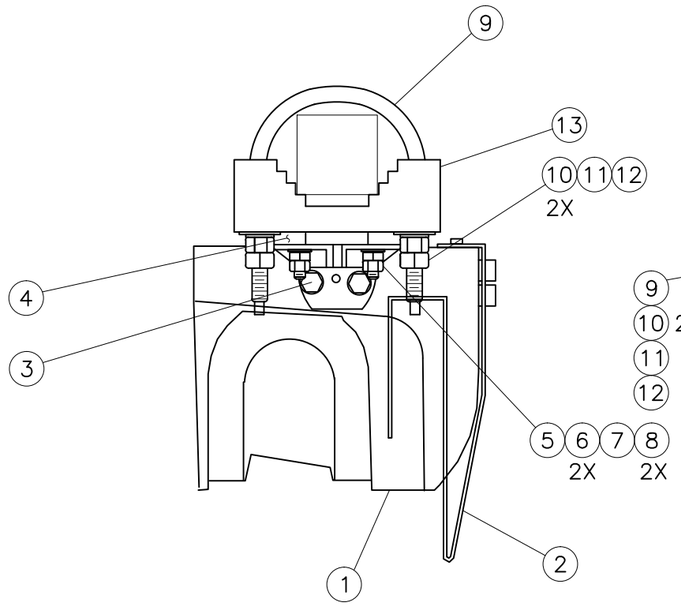

SECTION A

MOUNTED TO PIPE
N.T.S.

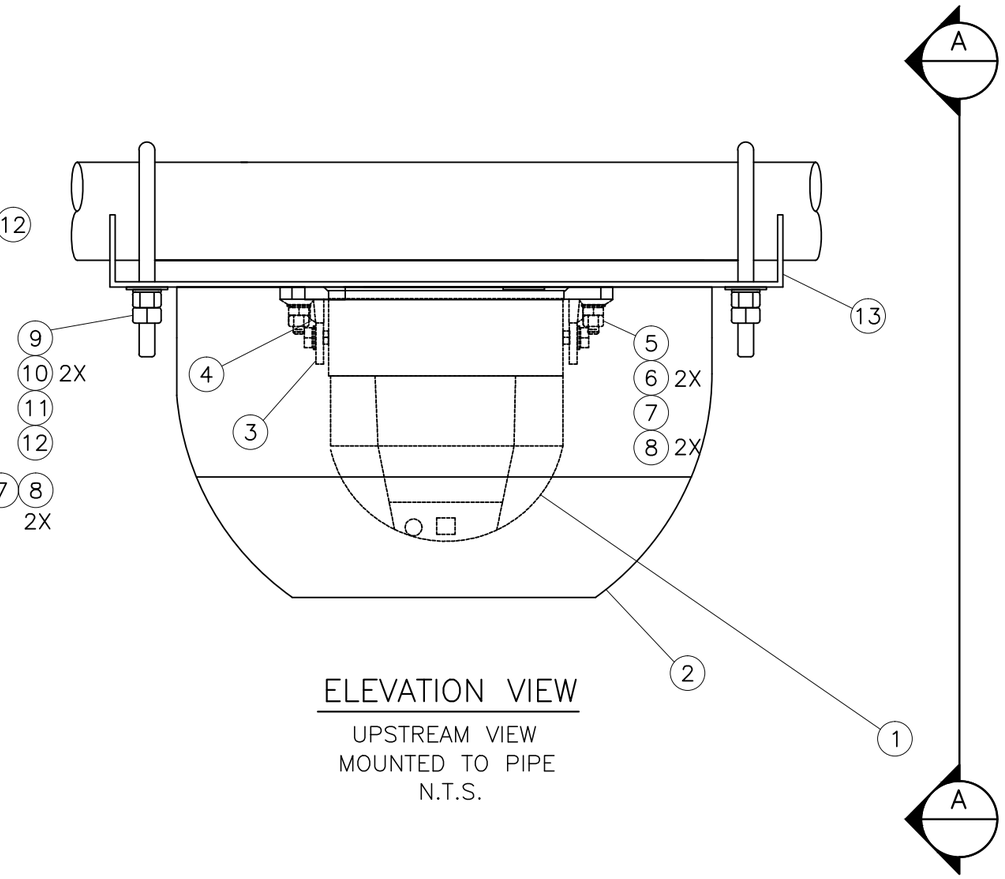

ELEVATION VIEW

UPSTREAM VIEW
MOUNTED TO PIPE
N.T.S.

ITEM NO.	QTY REQ'D	PART OR IDENTIFYING NUMBER	NOMENCLATURE OR DESCRIPTION	MANUFACTURER
14	2	LNCL-12-40-LK-N	RAYOLON CONNECTOR SEAL INSULATED SLEEVE	RAYCHEM
13	1	BRKT-STROBE2	BRACKET, PIPE MOUNTING, STROBE	SW STEEL
12	4	1133182	WASHER, FLAT, 3/8" GALVANIZED	FASTENAL
11	4	1133782	WASHER, LOCK, SPLIT, 3/8" GALVANIZED	FASTENAL
10	8	36705	NUT, HEX 3/8"-16, HOT DIP GALVANIZED, GRADE A	FASTENAL
9	2	11632-04401	U-BOLT, 3/8" -10 UNC, GALVANIZED, 6" LENGTH x 3.5" WIDTH	FASTENAL
8	8	1136701	HEX NUT, GALVANIZED, 1/4"-20, GRADE A	FASTENAL
7	4	1133780	SPLIT LOCK WASHER, GALVANIZED, MED FINISH	FASTENAL
6	8	1133180	FLAT WASHER, GALVANIZED, 1/4" USS	FASTENAL
5	4	1191804	HEX BOLT, GALVANIZED, 1/4"-20x1" ASTM A307A	FASTENAL
4	1	2015623	MOUNTING KIT#2	SICK
3	1	2015624	MOUNTING KIT#1	SICK
2	1	2063050	LMS511 PROTECTION HOOD	SICK
1	1	1046135	LMS 511-S14 OUTDOOR LMS, W/HEATER	SICK

NOTES:

1. SEE TOLL SYSTEM PLAN VIEW DRAWING FOR APPROXIMATE POSITION RELATIVE TO OTHER TOLL SYSTEM COMPONENTS.
2. ATTACH MOUNTING KIT#1 TO BASE OF SICK SCANNER USING FOUR (4) M8x9 BOLTS INCLUDED IN KIT.
3. ATTACH MOUNTING KIT#2 TO SCANNER AND MOUNTING KIT#1 USING (4) M8 BOLTS INCLUDED IN KIT.
4. INSTALL DUST PREVENTION SHIELD ON THE BASE OF THE SCANNER TO PREVENT DUST AND CONDENSATION ON THE FRONT WINDOW OF THE SCANNER. USE FOUR (4) M6x8 BOLTS INCLUDED IN KIT.
5. ATTACH SCANNER AND MOUNTING KITS TO STROBE BRACKET USING FOUR (4) 1" HEX BOLTS, WITH FLAT WASHERS ON EITHER SIDE OF STROBE BRACKET, LOCK–WASHERS, AND DOUBLE NUTS.
6. ATTACH STROBE BRACKET TO MOUNTING PIPE USING TWO (2) U–BOLTS WITH FLAT WASHERS, LOCK WASHERS, AND DOUBLED HEX NUTS. LEAVE LOOSE FOR ALIGNMENT.
7. APPLY RAYCHEM CONNECTOR SEAL (OR EQUIVALENT) PER MANUFACTURER'S INSTRUCTIONS.
8. ATTACH MAST MOUNTING BRACKET TO SICK MOUNTING BRACKET USING TWO (2) 3/8" BOLTS, ONE 3/8" FLAT WASHER, ONE 3/8" LOCK WASHER AND ONE M8 NUT.
9. ENSURE THAT THE CENTERLINE OF THE SICK SCANNER'S BEAM IS ALIGNED CORRECTLY ON THE PAVEMENT OF THE TRAVEL LANES RELATIVE TO THE VES CAMERA TRIGGER POINT. TIGHTEN LOCK IN ACCORDANCE WITH MANUFACTURER'S INSTRUCTIONS.

PRELIMINARY / DRAFT

FOR REVIEW ONLY. NOT FOR BUILD OR DESIGN WITHOUT APPROVAL BY AUTHORIZED REPRESENTATIVE OF SCHNEIDER ELECTRIC.

SCHNEIDER ELECTRIC
211 E SEVENTH STREET, SUITE 800, AUSTIN, TEXAS 78701

NETRMA
RETROFIT AVC SCANNER MOUNT DETAIL

DATE: 02/26/2014 SHEET 26 OF 33 SHEETS

DESIGNED BY: T.HAMMOND
DRAWN BY: T.HAMMOND
CHECKED BY:

CONFIDENTIAL: THIS DOCUMENT AND THE INFORMATION CONTAINED IN IT ARE CONFIDENTIAL AND CANNOT BE COPIED OR DISCLOSED IN WHOLE OR IN PART WITHOUT THE EXPRESS WRITTEN CONSENT OF **SCHNEIDER ELECTRIC.**

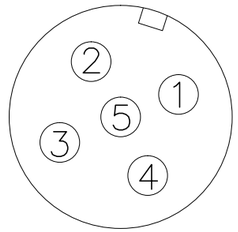

POWER CONNECTION

M12x5 PLUG A–TYPE

AVC SCANNER POWER WIRING DETAIL				
PIN	SIGNAL	FUNCTION	CONDUCTOR TYPE	CONDUCTOR COLOR
1	24 V SYS	POWER SUPPLY SENSOR	18 AWG 4–WIRE	
2	24 V HEAT	POWER SUPPLY HEATER		
3	GND SYS	GROUND POWER SUPPLY SENSOR		
4	RESERVED	DO NOT USE	N/A	N/A
5	GND HEAT	GROUND POWER SUPPLY HEATRER	18 AWG 4–WIRE	

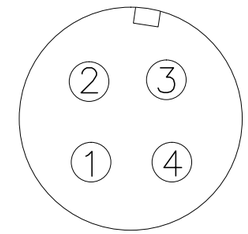

NETWORK CONNECTION

M12x4 SOCKET D–TYPE

AVC SCANNER NETWORK WIRING DETAIL				
PIN	SIGNAL	FUNCTION	CONDUCTOR TYPE	CONDUCTOR COLOR
1	TX+	TRANSMIT+	CAT–6	WHITE/ORANGE
2	RX+	RECEIVE+		WHITE/GREEN
3	TX–	TRANSMIT–		ORANGE
4	RX–	RECEIVE–		GREEN

NOTES:

1. SEE OMR6–C WIRING DETAIL SHEET FOR AVC SCANNER POWER CONNECTION TO SPECIFIC TERMINAL BLOCKS.

2. SEE NETWORK BLOCK DIAGRAM FOR AVC SCANNER NETWORK CONNECTION TO SPECIFIC SWITCH.

3. ALL FOUR WIRES OF THE BELDEN 28082A CONDUCTOR CAN BE USED TO WIRE THE SCANNER SYSTEM POWER SEPARATE FROM THE HEATER; OR PINS 1 AND 2 CAN BE JUMPERED, AND PINS 3 AND 5 CAN BE JUMPERED AT THE SCANNER OR AT THE TERMINAL BLOCKS.

PRELIMINARY / DRAFT

FOR REVIEW ONLY. NOT FOR BUILD OR DESIGN WITHOUT APPROVAL BY AUTHORIZED REPRESENTATIVE OF SCHNEIDER ELECTRIC.

SCHNEIDER ELECTRIC
211 E SEVENTH STREET, SUITE 800, AUSTIN, TEXAS 78701

NETRMA

RETROFIT
AVC SCANNER
WIRING DETAIL

DATE: 02/26/2014 SHEET 27 OF 33 SHEETS

DESIGNED BY: T.HAMMOND
DRAWN BY: T.HAMMOND
CHECKED BY:

CONFIDENTIAL: THIS DOCUMENT AND THE INFORMATION CONTAINED IN IT ARE CONFIDENTIAL AND CANNOT BE COPIED OR DISCLOSED IN WHOLE OR IN PART WITHOUT THE EXPRESS WRITTEN CONSENT OF **SCHNEIDER ELECTRIC.**

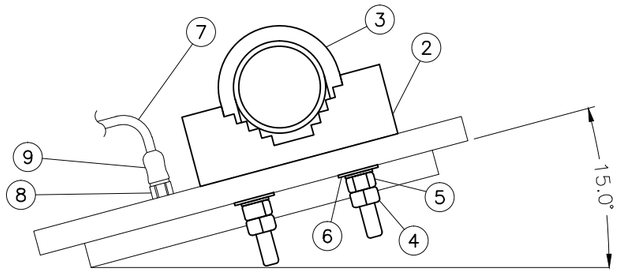

SECTION A

BASE BRACKET INSTALLATION TO ANTENNA

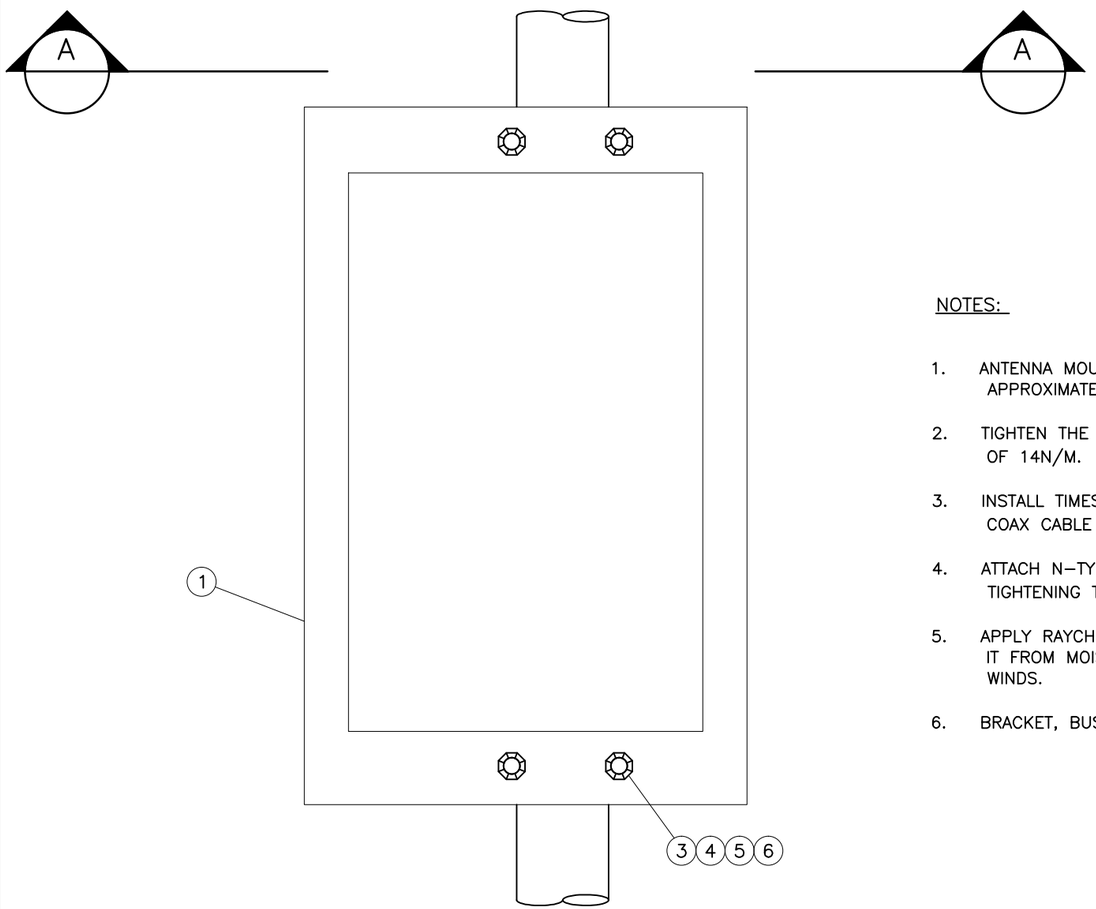

PLAN VIEW

BASE BRACKET INSTALLATION TO ANTENNA

(LOOKING UP FROM ROADWAY)

ITEM NO.	QTY REQ'D	PART OR IDENTIFYING NUMBER	NOMENCLATURE OR DESCRIPTION	MANUFACTURER
9	1	LNCL-12-140-LK-N	RAYCLON CONNECTOR SEAL INSULATED SLEAVE	RAYCHEM
8	1	EZ-600-NMH-RA-X	CONNECTOR, N-TYPE COAX, 90 DEGREE PLUG, MALE	TIMES MICROWAVE
7	1	LMR-600	CABLE, COAX	TIMES MICROWAVE
6	4	NOTE 6	BUSHING, FLAT MOUNTING	SIRIT
5	4	NOTE 6	WASHER, LOCK, 1/2", STAINLESS	SIRIT
4	4	NOTE 6	NUT, HEX, 1/2", STAINLESS	SIRIT
3	2	NOTE 6	U-BOLT, 1/2", ZINC PLATED	SIRIT
2	1	NOTE 6	BRAKET, PIPE MOUNTING	SIRIT
1	1	AA3152	ANTENNA	TRANSCORE

NOTES:

1. ANTENNA MOUNTED OVER CENTER LINE OF TRAVEL LANES. SEE TOLL SYSTEM PLAN VIEW DRAWING FOR APPROXIMATE POSITION RELATIVE TO OTHER TOLL SYSTEM COMPONENTS.
2. TIGHTEN THE BRACKET USING M8 SPRING WASHER, M8 NUT AND M8X70 BOLT. USE TIGHTENING TORQUE OF 14N/M.
3. INSTALL TIMES MICROWAVE N–TYPE CONNECTOR (OR EQUIVALENT) TO COAX CABLE AND HEAT SHRINK TO COAX CABLE CONNECTOR TO COVER THE CONNECTOR AND THE CABLE PER MANUFACTURER'S INSTRUCTIONS.
4. ATTACH N–TYPE MALE TERMINATED COAX CABLE TO ANTENNA'S N–TYPE FEMALE CONNECTOR. USE TIGHTENING TORQUE IN ACCORDANCE WITH MANUFACTURER'S INSTRUCTIONS.
5. APPLY RAYCHEM CONNECTOR SEAL (OR EQUIVALENT) PER MANUFACTURER'S INSTRUCTIONS TO PROTECT IT FROM MOISTURE PENETRATION AND LOOSENING OF CONNECTIONS FROM VIBRATIONS CAUSED BY STRONG WINDS.
6. BRACKET, BUSHINGS, U–BOLTS, NUTS + WASHERS SHOULD BE REUSED FROM EXISTING INSTALLATION.

PRELIMINARY / DRAFT

FOR REVIEW ONLY. NOT FOR BUILD OR DESIGN WITHOUT APPROVAL BY AUTHORIZED REPRESENTATIVE OF SCHNEIDER ELECTRIC.

SCHNEIDER ELECTRIC

211 E SEVENTH STREET, SUITE 800, AUSTIN, TEXAS 78701

NETRMA

RETROFIT

AVI ANTENNA

MOUNT DETAIL

DATE: 02/26/2014

SHEET 28 OF 33 SHEETS

DESIGNED BY: T.HAMMOND

DRAWN BY: T.HAMMOND

CHECKED BY:

CONFIDENTIAL: THIS DOCUMENT AND THE INFORMATION CONTAINED IN IT ARE CONFIDENTIAL AND CANNOT BE COPIED OR DISCLOSED IN WHOLE OR IN PART WITHOUT THE EXPRESS WRITTEN CONSENT OF **SCHNEIDER ELECTRIC.**

avi wiring detail

PRELIMINARY / DRAFT

FOR REVIEW ONLY. NOT FOR BUILD OR DESIGN WITHOUT APPROVAL BY AUTHORIZED REPRESENTATIVE OF SCHNEIDER ELECTRIC.

SCHNEIDER ELECTRIC
211 E SEVENTH STREET, SUITE 800, AUSTIN, TEXAS 78701

NETRMA
RETROFIT
AVI ANTENNA
WIRING DETAIL

DATE: 02/26/2014

DESIGNED BY: T.HAMMOND	
DRAWN BY: T.HAMMOND	
CHECKED BY:	

CONFIDENTIAL: THIS DOCUMENT AND THE INFORMATION CONTAINED IN IT ARE CONFIDENTIAL AND CANNOT BE COPIED OR DISCLOSED IN WHOLE OR IN PART WITHOUT THE EXPRESS WRITTEN CONSENT OF **SCHNEIDER ELECTRIC.**

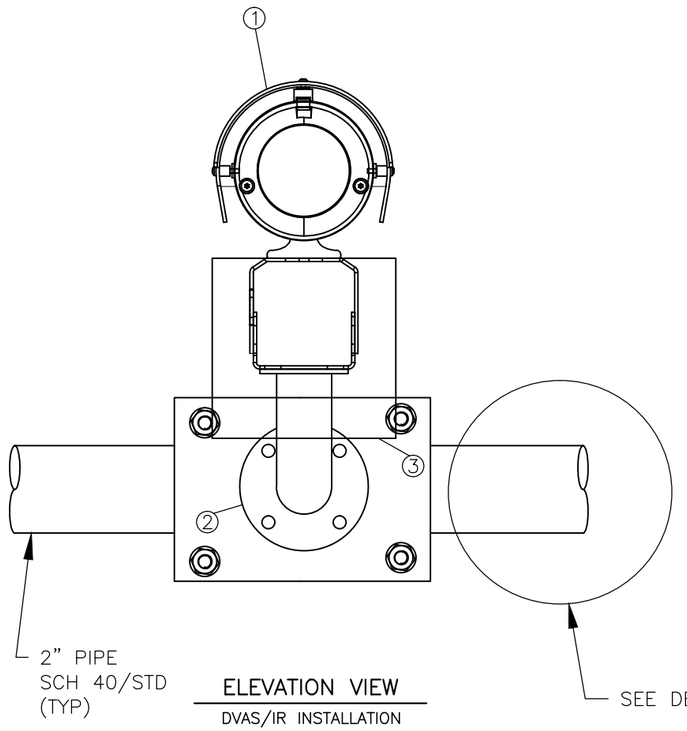

ELEVATION VIEW

DVAS/IR INSTALLATION

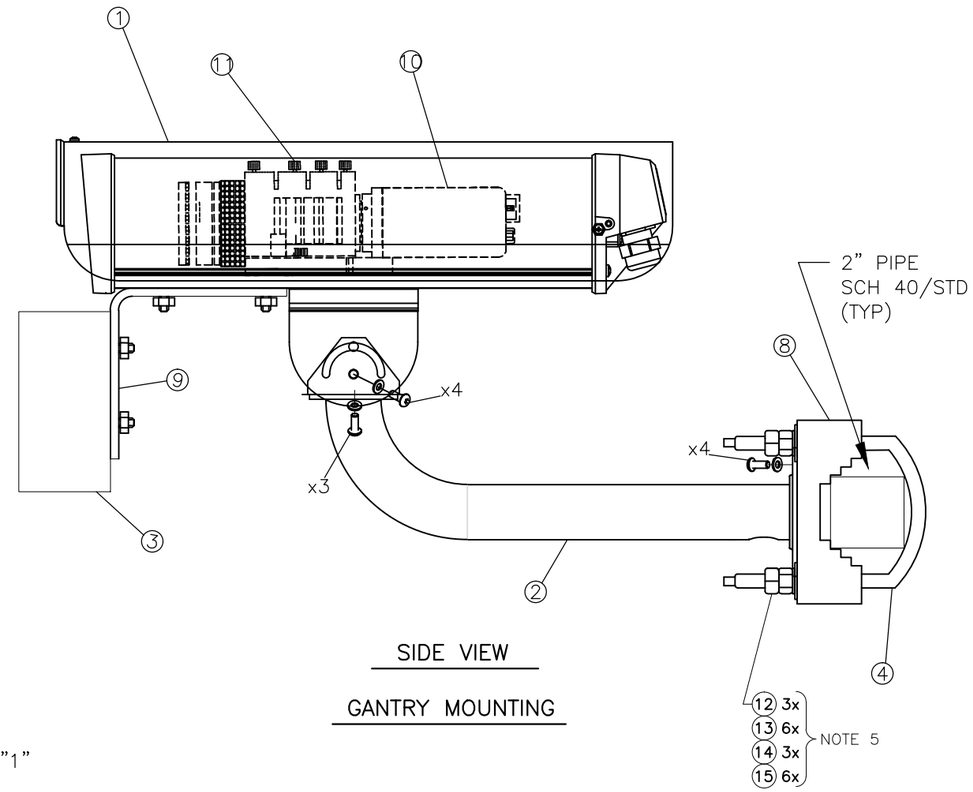

SIDE VIEW

GANTRY MOUNTING

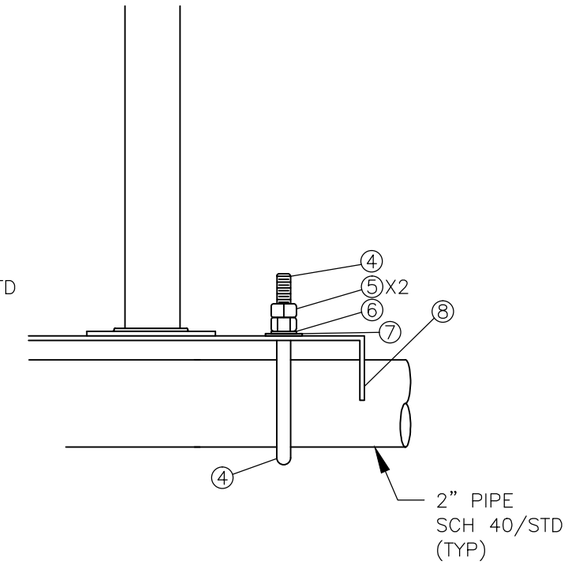

DETAIL 1

U-BOLT CONNECTION TO BRACKET

NOTES:

1. SEE GANTRY ELEVATION DETAILS FOR LOCATION OF DVAS/IR ASSEMBLY ON TOLL HANGER(S).
2. DVAS CAMERA WIRING (NOT SHOWN) TO BE ROUTED IN ACCORDANCE WITH LOCAL ELECTRICAL CODES AND TERMINATED IN ACCORDANCE WITH FIELD WIRING DRAWINGS.
3. MOUNT THE DVAS HOUSING AND IR ANGLE BRACKET TO THE DVAS MOUNTING BRACKET USING HARDWARE PROVIDED IN HOUSING KIT. THE IR ANGLE BRACKET WILL HAVE TO HAVE ITS CAMERA-MOUNT PORTION TRIMMED BY APPROXIMATELY HALF IN THE FIELD SO THAT IT DOES NOT INTERFERE WITH THE CAMERA WALL MOUNT BRACKET. NEW HOLES WILL NEED TO BE DRILLED INTO THE BRACKET AND CAMERA HOUSING TO ACCOMMODATE THE SHORTER L-BRACKET.
4. MOUNT THE IR ILLUMINATOR TO THE IR ANGLE BRACKET USING THE HARDWARE PROVIDED BY THE MANUFACTURER. MOUNT THE DVAS CAMERA IN THE HOUSING USING THE HARDWARE PROVIDED BY THE MANUFACTURER.
5. MOUNT THE UNMODIFIED DVAS MOUNTING BRACKET TO THE CAMERA BRACKET USING THREE (3) 1/4" HEX BOLTS, WASHERS ON EITHER SIDE OF THE CAMERA BRACKET, LOCK WASHERS AND DOUBLE NUTS.
6. ATTACH THE CAMERA BRACKET (WITH DVAS CAMERA, HOUSING AND IR ATTACHED) ON THE 2" PIPE USING THE U-BOLTS, WASHERS, LOCK WASHERS AND DOUBLE NUTS AS SHOWN IN DETAIL A
7. ALIGN THE CAMERA ANGLES AND ADJUST THE CAMERA FOCUS AND ZOOM AS DIRECTED BY THE ENGINEER IN THE FIELD.

NOTE 5

ITEM NO.	QTY REQ'D	PART OR IDENTIFYING NUMBER	NOMENCLATURE OR DESCRIPTION	MANUFACTURER
16	-	1191854	HEX BOLT, GALVANIZED, 3/8"-16 x 1" ASTM A 307A	FASTENAL
15	6	1136701	HEX NUT, GALVANIZED, 1/4"-20, GRADE A	FASTENAL
14	3	1133780	SPLIT LOCK WASHER, GALVANIZED, 1/4" MED FINISH	FASTENAL
13	6	1133180	FLAT WASHER, GALVANIZED, 1/4" USS	FASTENAL
12	3	1191804	HEX BOLT, GALVANIZED, 1/4"-20 x 1" ASTM A 307A	FASTENAL
11	1	2000030764	LENS, VARIFOCAL, 2.8-8 MM, DC-AUTO IRIS, DAY/NIGHT	KOWA
10	1	BIP2-2500c-dn	CAMERA, 1/3" PROGRESSIVE SCAN CCD, IP, 1280 (H) X 960 (V)	BASLER
9	1	AT-16S	IR ILLUMINATOR ANGLE BRACKET AND MOUNTING HW	AXTON
8	1	BRKT-CAM2	BRACKET, PIPE MOUNTING, CAMERA	HOWARD STEEL
7	5	1133182	WASHER, FLAT, 3/8" GALVANIZED USS	FASTENAL
6	4	1133782	WASHER, SPLIT LOCK, 3/8" GALVANIZED, MED FINISH	FASTENAL
5	8	36705	NUT, HEX, 3/8"-16 GALVANIZED, GRADE A	FASTENAL
4	2	11632-04401	U-BOLT, 3/8"-16 UNL, GALVANIZED, 6" LENGTH x 3.5" WIDTH	FASTENAL
3	1	162830	IR ILLUMINATOR 850MM, 30°, AT-165 MODEL	AXTON
2	1	MT9215	CAMERA HOUSING BRACKET	AIGIS
1	1	HS9483-2HB	CAMERA HOUSING WITH HEATER, BLOWER IP66	AIGIS

PRELIMINARY / DRAFT

FOR REVIEW ONLY. NOT FOR BUILD OR DESIGN WITHOUT APPROVAL BY AUTHORIZED REPRESENTATIVE OF SCHNEIDER ELECTRIC.

SCHNEIDER ELECTRIC
211 E SEVENTH STREET, SUITE 800, AUSTIN, TEXAS 78701

NETRMA
RETROFIT DVAS CAMERA MOUNT DETAIL

DATE: 02/26/2014 SHEET 30 OF 33 SHEETS

DESIGNED BY: T.HAMMOND
DRAWN BY: T.HAMMOND
CHECKED BY:

CONFIDENTIAL: THIS DOCUMENT AND THE INFORMATION CONTAINED IN IT ARE CONFIDENTIAL AND CANNOT BE COPIED OR DISCLOSED IN WHOLE OR IN PART WITHOUT THE EXPRESS WRITTEN CONSENT OF **SCHNEIDER ELECTRIC.**

dvas wiring detail

PRELIMINARY / DRAFT

FOR REVIEW ONLY. NOT FOR BUILD OR DESIGN WITHOUT APPROVAL BY AUTHORIZED REPRESENTATIVE OF SCHNEIDER ELECTRIC.

SCHNEIDER ELECTRIC
211 E SEVENTH STREET, SUITE 800, AUSTIN, TEXAS 78701

NETRMA
RETROFIT
DVAS CAMERA
WIRING DETAIL

DATE: 02/26/2014

DESIGNED BY: T.HAMMOND
DRAWN BY: T.HAMMOND
CHECKED BY:

CONFIDENTIAL: THIS DOCUMENT AND THE INFORMATION CONTAINED IN IT ARE CONFIDENTIAL AND CANNOT BE COPIED OR DISCLOSED IN WHOLE OR IN PART WITHOUT THE EXPRESS WRITTEN CONSENT OF **SCHNEIDER ELECTRIC.**

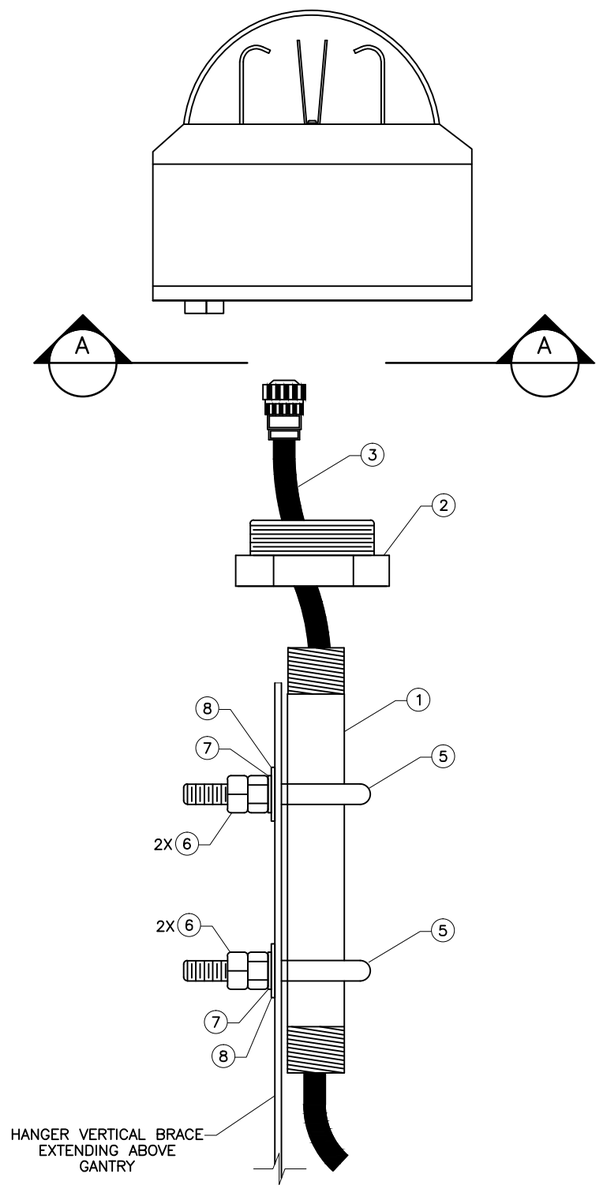

ELEVATION VIEW
LIGHT SENSOR/MOUNTING ASSEMBLY

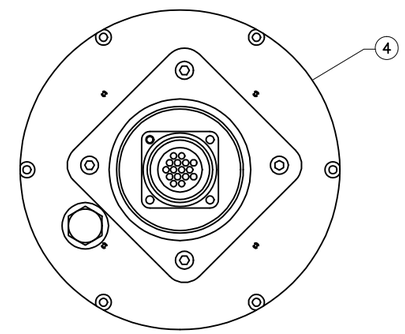

SECTION A
LIGHT SENSOR

NOTES:

1. SEE TOLL SYSTEM GANTRY ELEVATION DRAWING FOR APPROXIMATE POSITION OF LIGHT SENSOR ASSEMBLY ON GANTRIES.
2. TRAFFIC LIGHT SENSOR WIRING TO BE ROUTED IN ACCORDANCE WITH LOCAL ELECTRICAL CODES AND TERMINATED IN ACCORDANCE WITH FIELD WIRING DRAWINGS.
3. PIPE NIPPLE (ITEM 1) TO BE MOUNTED TO TOLL HANGER VERTICAL BRACE WITH A MINIMUM EXTENSION ABOVE THE TOP OF THE VERTICAL BRACE OF 1".
4. SEE TOLL HANGER DETAIL SHEET FOR VERTICAL BRACE DETAILS.

#	QTY REQ'D	PART OR IDENTIFYING NUMBER	NOMENCLATURE OR DESCRIPTION	MANUFACTURER
8	4	1133182	WASHER, FLAT, 3/8" GALVANIZED, 18-8	FASTENAL
7	4	1133782	WASHER, SPLIT LOCK, 3/8", GALVANIZED, 18-8	FASTENAL
6	8	36705	HEX NUT, 3/8"-16, HOT DIP GALVANIZED, 18-8, GRADE A	FASTENAL
5	2	41922	U-BOLT, 3/8" - 16x1" PIPE SIZE, HOT DIP GALVANIZED	FASTENAL
4	1	TLS-300	TRAFFIC LIGHT SENSOR	JAI
3	1	20008101	COMPOSITE CABLE	JAI
2	1	466697	PIPE FITTING, HEX, 2" M-NPTx1" F-NTP, GALVANIZED	FASTENAL
1	1	452524	PIPE NIPPLE 1"x5", GALVANIZED, M-NPT	FASTENAL

PRELIMINARY / DRAFT

FOR REVIEW ONLY. NOT FOR BUILD OR DESIGN WITHOUT APPROVAL BY AUTHORIZED REPRESENTATIVE OF SCHNEIDER ELECTRIC.

SCHNEIDER ELECTRIC
211 E SEVENTH STREET, SUITE 800, AUSTIN, TEXAS 78701

NETRMA
RETROFIT VES LIGHT SENSOR MOUNT DETAIL

DATE: 02/26/2014 SHEET 32 OF 33 SHEETS

DESIGNED BY: T.HAMMOND
DRAWN BY: T.HAMMOND
CHECKED BY:

CONFIDENTIAL: THIS DOCUMENT AND THE INFORMATION CONTAINED IN IT ARE CONFIDENTIAL AND CANNOT BE COPIED OR DISCLOSED IN WHOLE OR IN PART WITHOUT THE EXPRESS WRITTEN CONSENT OF **SCHNEIDER ELECTRIC.**

VES SENSOR WIRING DETAIL						
TLS–300 PIN	SIGNAL	FUNCTION	CONDUCTOR TYPE	CONDUCTOR COLOR	MOXA INPUT PORT	MOXA INPUT PIN
1	GND HTR	–24 VDC HEATER	JAI 20008101 TLS–300 COMPOSITE CABLE	WHITE/GREEN	N/A	N/A
2				GREEN	N/A	N/A
3	+24 VDC HTR	+24 VDC HEATER		RED/BLUE	N/A	N/A
4				BLUE/RED	N/A	N/A
6	+24 VDC	+24 VDC CAMERA		YELLOW	N/A	N/A
10	GND	–24 VDC CAMERA		WHITE	N/A	N/A
13	D1–	D1– TO ETH. CONV (MOXA)		BROWN	1	R+/D+
14	D1+	D1+ TO ETH. CONV. (MOXA)		WHITE/BROWN	1	R–/D–
15	D0–	D0– TO HOST		ORANGE	N/A	N/A
16	D0+	D0+ TO HOST		WHITE/ORANGE	N/A	N/A

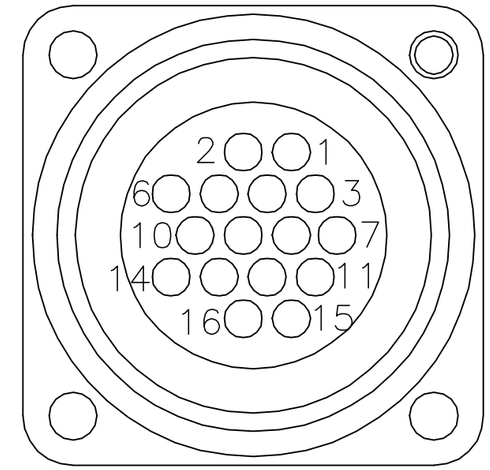

TLS–300
CABLE CONNECTION

NOTES:

1. SEE OMR6–C WIRING DETAIL SHEET FOR VES SENSOR POWER CONNECTION TO SPECIFIC TERMINAL BLOCKS.

2. SEE OMR6–C WIRING DETAIL SHEET FOR MOXA MEDIA CONVERTER POWER CONNECTION TO SPECIFIC TERMINAL BLOCKS.

3. SEE NETWORK BLOCK DIAGRAM FOR MOXA MEDIA CONVERTER NETWORK CONNECTION TO SPECIFIC SWITCH.

PRELIMINARY / DRAFT

FOR REVIEW ONLY. NOT FOR BUILD OR DESIGN WITHOUT APPROVAL BY AUTHORIZED REPRESENTATIVE OF SCHNEIDER ELECTRIC.

SCHNEIDER ELECTRIC
211 E SEVENTH STREET, SUITE 800, AUSTIN, TEXAS 78701

NETRMA
RETROFIT
VES LIGHT SENSOR
WIRING DETAIL

DATE: 02/26/2014 SHEET 33 OF 33 SHEETS

DESIGNED BY: T.HAMMOND
DRAWN BY: T.HAMMOND
CHECKED BY:

CONFIDENTIAL: THIS DOCUMENT AND THE INFORMATION CONTAINED IN IT ARE CONFIDENTIAL AND CANNOT BE COPIED OR DISCLOSED IN WHOLE OR IN PART WITHOUT THE EXPRESS WRITTEN CONSENT OF **SCHNEIDER ELECTRIC.**