TOLL 49 SEGMENT 3B
TOLLING PLANS
DETAILED DESIGN – 100%

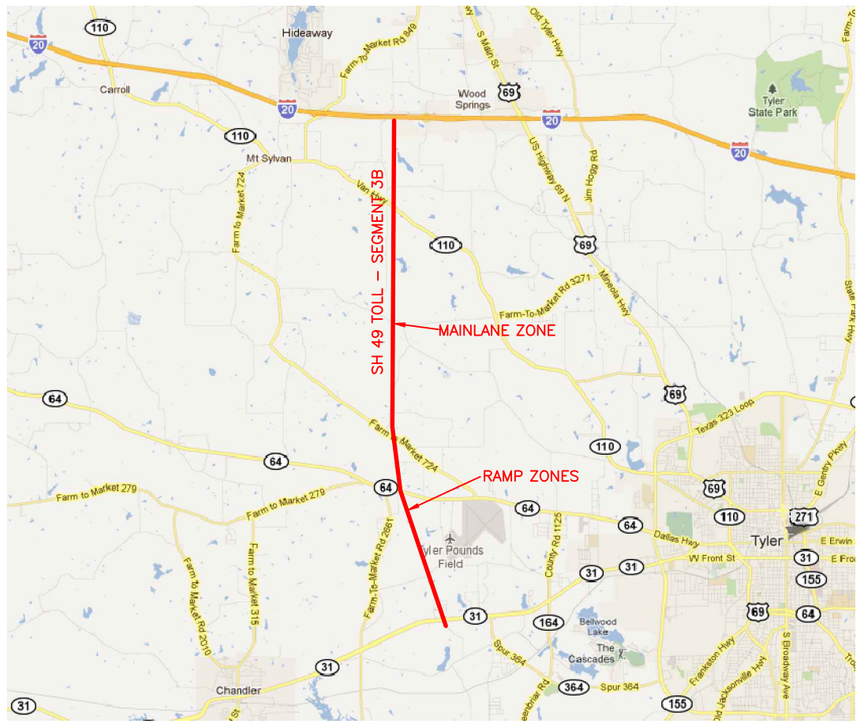

PRELIMINARY / DRAFT

FOR REVIEW ONLY. NOT FOR BUILD OR DESIGN WITHOUT APPROVAL BY AUTHORIZED REPRESENTATIVE OF TELVENT ENGINEERING.

DATE	DESCRIPTION OF REVISION	NAME

TELVENT
211 E SEVENTH STREET, SUITE 800, AUSTIN, TEXAS 78701

NET RMA
TOLL 49, SEGMENT 3B
COVER PAGE
TOLLING DESIGN

DATE: 5/10/2012 SHEET 1 OF 47 SHEETS

DESIGNED BY:
DRAWN BY: T. HAMMOND
CHECKED BY:

TELVENT CONFIDENTIAL: THIS DOCUMENT AND THE INFORMATION CONTAINED IN IT ARE CONFIDENTIAL AND CANNOT BE COPIED OR DISCLOSED IN WHOLE OR IN PART WITHOUT THE EXPRESS WRITTEN CONSENT OF **TELVENT, INC.**

INDEX

SHEET	NAME
1	COVER PAGE
2	INDEX – KEY – NOTES
3	MAINLANE ZONE LAYOUT
4	MAINLANE PAD LAYOUT
5	MAINLANE RISER DETAIL – NB VIEW
6	MAINLANE RISER DETAIL – SB VIEW
7	MAINLANE CABLE SCHEDULE
8	MAINLANE PLAN VIEW
9	RAMP ZONES PROXIMITY LOAYOUT
10	NB RAMP ZONE LAYOUT
11	NB RAMP PAD LAYOUT
12	NB RAMP PLAN VIEW
13	SB RAMP ZONE LAYOUT
14	SB RAMP PAD LAYOUT
15	SB RAMP PLAN VIEW
16	RAMP RISER DETAIL – ENTRY GANTRY
17	RAMP RISER DETAIL – EXIT GANTRY
18	RAMPS CABLE SCHEDULE
19	CRITICAL DIMENSIONS
20	AVI READER CABINET DETAILS
21	MAINLANE TREADLE PLAN VIEW DETAILS
22	RAMP TREADLE PLAN VIEW DETAILS
23	TREADLE CUT DETAILS
24	VES CAMERA & STROBE DETAILS
25	SICK SCANNER DETAILS
26	DVAS CAMERA DETAILS
27	AVI ANTENNA DETAILS
28	NETWORK DISTRIBUTION
29	SYSTEM BLOCK DIAGRAM
30	MAINLANE SYSTEM I/O DIAGRAM
31	RAMP SYSTEM I/O DIAGRAM
32	FREQUENCY PLAN
33	VES COMMO WIRING
34	MAINLANE POWER SHELF COMPONENTS
35	MAINLANE NB POWER WIRING
36	MAINLANE SB POWER WIRING
37	MAINLANE SNAP SHELF COMPONENTS
38	MAINLANE SNAP INPUT WIRING
39	MAINLANE SNAP OUTPUT WIRING
40	MAINLANE SNAP POWER WIRING
41	RAMP POWER SHELF COMPONENTS
42	RAMP POWER WIRING
43	RAMP SNAP SHELF COMPONENTS
44	RAMP SNAP INPUT WIRING
45	RAMP SNAP OUTPUT WIRING
46	RAMP SNAP POWER WIRING
47	RACK COMPONENTS

NOTES:

1. GROUND BOXES ON PAVEMENT DO NOT INCLUDE APRONS.
2. GROUND BOXES OFF PAVEMENT INCLUDE APRONS.
3. ALL CONDUIT RISERS SHALL HAVE A CABLE TIE ATTACHED/TAPED TO THE RISER AND EXTENDING ABOVE THE FINISHED ROAD SURFACE.
4. ALL CONDUIT IS SCHEDULE 40 UNLESS OTHERWISE SPECIFIED.

LEGEND:

- NOTE
- CONDUIT DESIGNATION
- DETAIL DESIGNATION
- PROPOSED CONDUIT RUN
- TYPE D GROUNDBOX (30.5" x 17.5")
- DUAL ROADSIDE CABINET (48.6" x 30.3")
- GANTRY COLUMN
- TREADLE RISER
- DVAS CAMERA, PLAN VIEW
- DVAS CAMERA, ELEVATION VIEW
- LIGHT SENSOR, PLAN VIEW
- LIGHT SENSOR, ELEVATION VIEW
- STROBE, PLAN VIEW
- STROBE, ELEVATION VIEW
- VES CAMERA, PLAN VIEW
- VES CAMERA, PROFILE VIEW
- VES CAMERA, ELEVATION VIEW
- SICK SCANNER, PLAN VIEW
- SICK SCANNER, PROFILE VIEW
- SICK SCANNER, ELEVATION VIEW
- AVI ANTENNA, PLAN VIEW
- AVI ANTENNA, PROFILE VIEW
- AVI ANTENNA, ELEVATION VIEW
- FIBER TREADLE
- CABLE JUNCTION BOX

PRELIMINARY / DRAFT

FOR REVIEW ONLY. NOT FOR BUILD OR DESIGN WITHOUT APPROVAL BY AUTHORIZED REPRESENTATIVE OF TELVENT ENGINEERING.

DATE	DESCRIPTION OF REVISION	NAME

TELVENT
211 E SEVENTH STREET, SUITE 800, AUSTIN, TEXAS 78701

NET RMA
TOLL 49 SEGMENT 3B

INDEX–KEY–NOTES

DATE: 5/10/2012 SHEET 2 OF 47 SHEETS

DESIGNED BY:
DRAWN BY: T. HAMMOND
CHECKED BY:

TELVENT CONFIDENTIAL: THIS DOCUMENT AND THE INFORMATION CONTAINED IN IT ARE CONFIDENTIAL AND CANNOT BE COPIED OR DISCLOSED IN WHOLE OR IN PART WITHOUT THE EXPRESS WRITTEN CONSENT OF **TELVENT, INC.**

NOTES:

1. SEGMENT 4, TOLL 49 PLANS, SHEET RD–691, MAINLANE STA 303+06.06,19.00' LT
2. SEGMENT 4, TOLL 49 PLANS, SHEET RD–691, MAINLANE STA 303+61.06,19.00' LT
3. NORTHBOUND TREADLE RISER LOCATED AT STA 303+15.06, 1.00' LT
4. NORTHBOUND TREADLE RISER LOCATED AT STA 303+16.48, 1.00' LT
5. SOUTHBOUND TREADLE RISER LOCATED AT STA 303+50.36, 25.00' RT
6. SOUTHBOUND TREADLE RISER LOCATED AT STA 303+51.64, 25.00' RT
7. THE AVI READER CABINET IS AFIXED TO THE GANTRY COLUMN (BY OTHERS) APPROXIMATELY FOUR FEET ABOVE GROUND LEVEL. POWER AND COMMS CONDUITS ARE TAPPED FROM THE COLUMN CONDUITS (BY OTHERS). THE CABINET SHALL BE PLACED SO THAT PERSONNEL ACCESSING IT WILL HAVE THE COLUMN BETWEEN THEM AND ONCOMING TRAFFIC.
8. NORTHBOUND SHOULDER LOOP RISER LOCATED AT STA 303+24.89, 7.50' LT
9. SOUTHBOUND SHOULDER LOOP RISER LOCATED AT STA 303+42.48, 31.50' RT

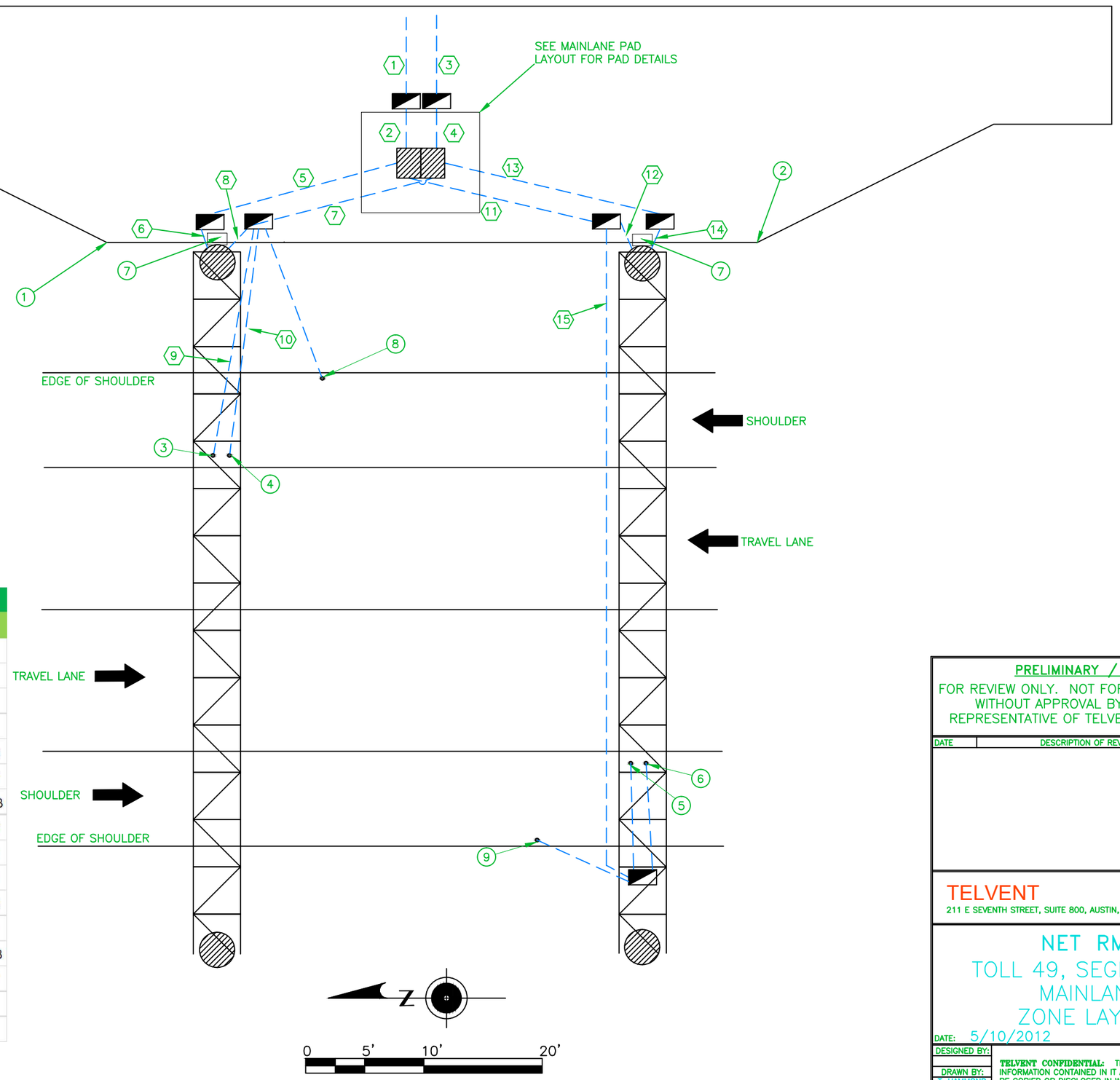

MAINLANE CONDUIT DESIGNATIONS				
RUN #	Conduit ID	QTY 2"	QTY 4"	Description
1	AA	1	--	INCOMING POWER - BY OTHERS
2	AB	1	--	INCOMING POWER - BY OTHERS
3	AC	1	--	INCOMING COMMS - BY OTHERS
4	AD	1	--	INCOMING COMMS - BY OTHERS
5	BA	--	1	CABINET POWER TO NORTH GANTRY POWER GB
6	BB	--	1	NORTH GANTRY POWER GB TO NORTH GANTRY
7	CA	--	1	CABINET COMMS TO NORTH GANTRY COMMS GB
8	CB	--	1	NORTH GANTRY COMMS GB TO NORTH GANTRY
9	DA	1	--	NORTH GANTRY COMMS GB TO TREADLE RISER
10	DB	1	--	NORTH GANTRY COMMS GB TO TREADLE RISER
11	BC	--	1	CABINET POWER TO SOUTH GANTRY POWER GB
12	BD	--	1	SOUTH GANTRY POWER GB TO SOUTH GANTRY
13	CC	--	1	CABINET COMMS TO SOUTH GANTRY COMMS GB
14	CD	--	1	SOUTH GANTRY COMMS GB TO SOUTH GANTRY
15	DC	1	--	SOUTH GANTRY COMMS GB TO TREADLE RISER
16	DD	1	--	SOUTH GANTRY COMMS GB TO TREADLE RISER

PRELIMINARY / DRAFT

FOR REVIEW ONLY. NOT FOR BUILD OR DESIGN WITHOUT APPROVAL BY AUTHORIZED REPRESENTATIVE OF TELVENT ENGINEERING.

DATE	DESCRIPTION OF REVISION	NAME

TELVENT
211 E SEVENTH STREET, SUITE 800, AUSTIN, TEXAS 78701

NET RMA
TOLL 49, SEGMENT 3B
MAINLANE
ZONE LAYOUT

DATE: 5/10/2012 SHEET 3 OF 47 SHEETS

DESIGNED BY:
DRAWN BY: T. HAMMOND
CHECKED BY:

TELVENT CONFIDENTIAL: THIS DOCUMENT AND THE INFORMATION CONTAINED IN IT ARE CONFIDENTIAL AND CANNOT BE COPIED OR DISCLOSED IN WHOLE OR IN PART WITHOUT THE EXPRESS WRITTEN CONSENT OF TELVENT, INC.

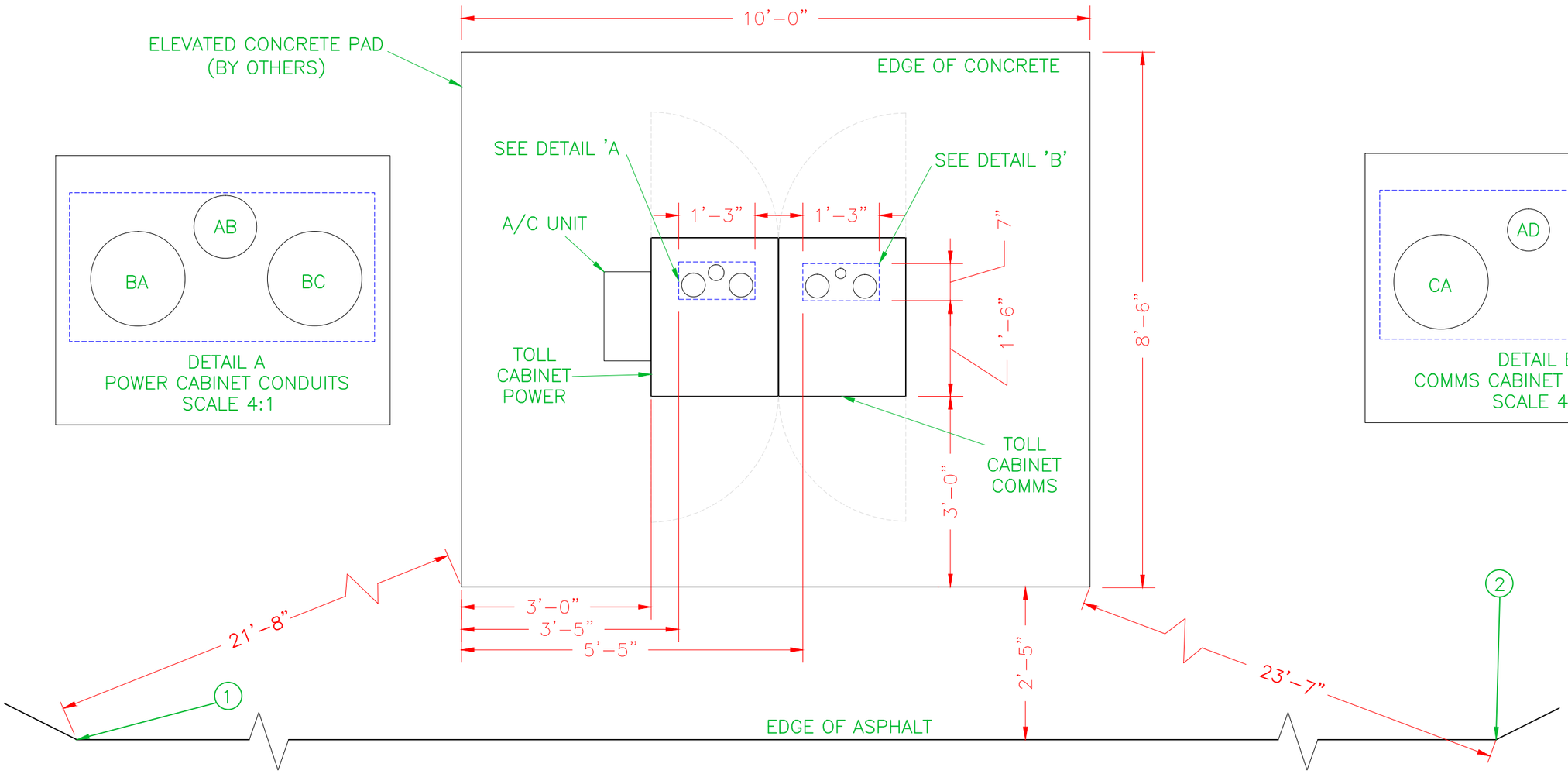

DETAIL A
POWER CABINET CONDUITS
SCALE 4:1

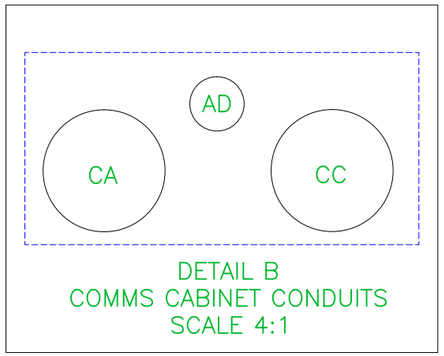

DETAIL B
COMMS CABINET CONDUITS
SCALE 4:1

NOTES:

1. SEGMENT 4, TOLL 49 PLANS, SHEET RD-691, MAINLANE STA 303+06.06,19.00' LT
2. SEGMENT 4, TOLL 49 PLANS, SHEET RD-691, MAINLANE STA 303+61.06,19.00' LT
3. ALL CONDUIT STUB OUTS SHALL HAVE MINIMUM 1 INCH CLEARANCE FROM OTHER STUB OUTS. ALL CONDUIT TO BE INSTALLED PER NEC CODE.
4. ALL CONDUIT STUB OUTS SHALL EXTEND 6-10 INCHES ABOVE FINISHED SURFACE.
5. CONDUITS WITHIN A DEFINED ZONE MUST FALL WITHIN THAT ZONE FOR THEIR FULL HEIGHT.
6. THE ELEVATED CONCRETE PAD SHALL EXTEND NO LESS THAN THREE FEET FROM EACH SIDE OF THE TOLLING CABINET.
7. SEE MAINLANE ZONE LAYOUT FOR ADDITIONAL CONDUIT DETAILS.

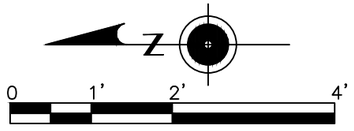

PRELIMINARY / DRAFT

FOR REVIEW ONLY. NOT FOR BUILD OR DESIGN WITHOUT APPROVAL BY AUTHORIZED REPRESENTATIVE OF TELVENT ENGINEERING.

DATE	DESCRIPTION OF REVISION	NAME

TELVENT
211 E SEVENTH STREET, SUITE 800, AUSTIN, TEXAS 78701

NET RMA
TOLL 49, SEGMENT 3B
MAINLANE
PAD LAYOUT

DATE: 5/10/2012 SHEET 4 OF 47 SHEETS

DESIGNED BY:
DRAWN BY: T. HAMMOND
CHECKED BY:

TELVENT CONFIDENTIAL: THIS DOCUMENT AND THE INFORMATION CONTAINED IN IT ARE CONFIDENTIAL AND CANNOT BE COPIED OR DISCLOSED IN WHOLE OR IN PART WITHOUT THE EXPRESS WRITTEN CONSENT OF TELVENT, INC.

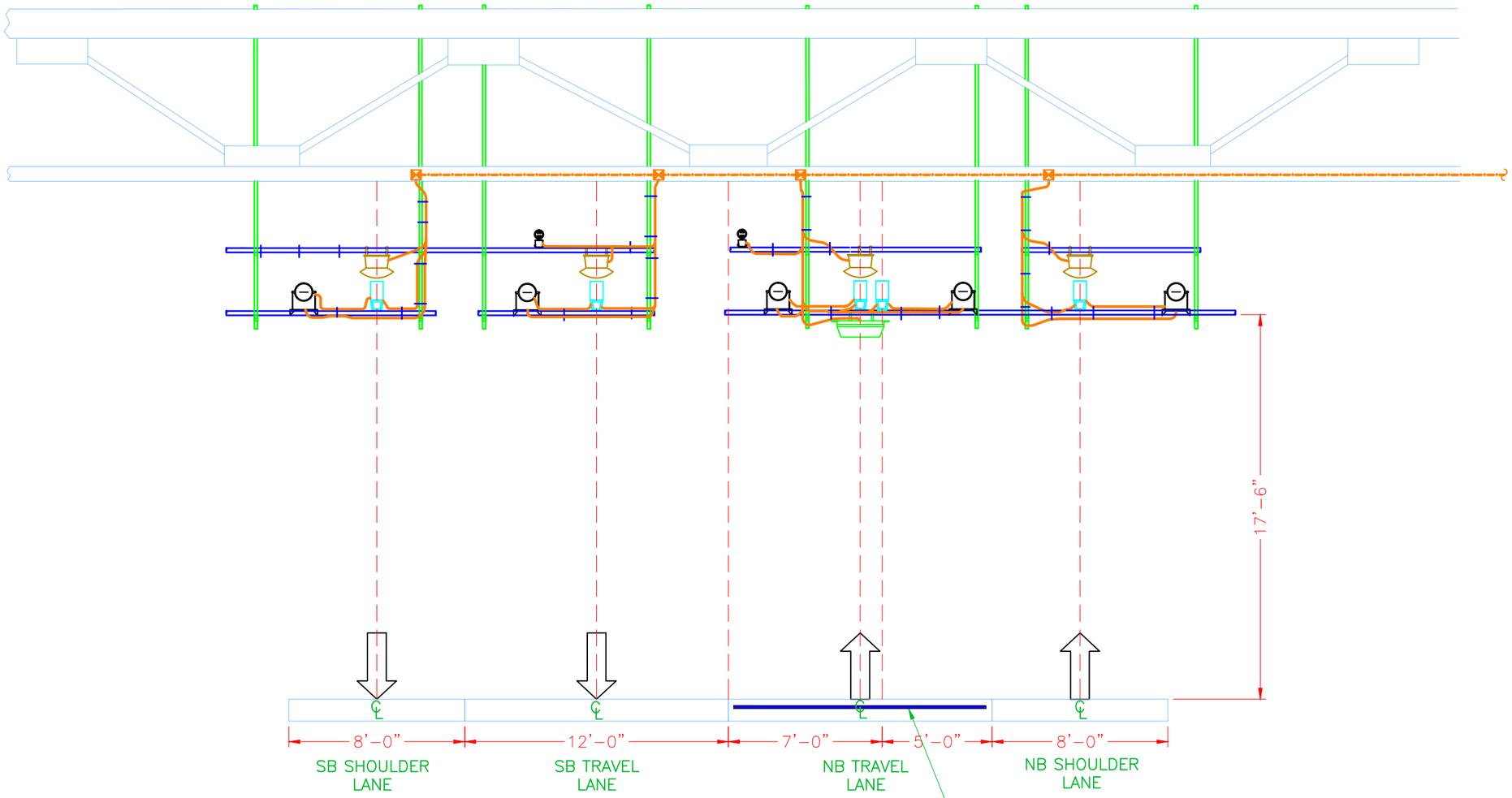

ELEVATION
MAINLANE
NORTH GANTRY
NORTHBOUND VIEW

PROPOSED NB TREADLE. SEE MAINLANE TREADLE CUT DETAILS SHEET FOR SAWCUT AND INSTALLATION DETAILS.

0 3' 6' 12'

NOTES:

1. SEE MAINLANE ZONE LAYOUT SHEET FOR CONDUIT RUNS ASSOCIATED WITH THIS LAYOUT.
2. SEE MAINLANE CABLE SCHEDULE SHEET FOR CABLING ASSOCIATED WITH THIS LAYOUT.
3. DROP DOWN HANGARS CAN BE UNISTRUT. THEY SHALL BE FIXED/UNMOVABLE. THEY SHALL BE DESIGNED TO ELIMINATE VIBRATION AND MOVEMENT IN THE PITCH, ROLL AND YAW AXES.

PRELIMINARY / DRAFT
FOR REVIEW ONLY. NOT FOR BUILD OR DESIGN WITHOUT APPROVAL BY AUTHORIZED REPRESENTATIVE OF TELVENT ENGINEERING.

DATE	DESCRIPTION OF REVISION	NAME

TELVENT
211 E SEVENTH STREET, SUITE 800, AUSTIN, TEXAS 78701

NET RMA
TOLL 49, SEGMENT 3B
MAINLANE
RISER DETAIL NB VIEW

DATE: 5/10/2012 SHEET 5 OF 47 SHEETS

DESIGNED BY:
DRAWN BY: T. HAMMOND
CHECKED BY:

TELVENT CONFIDENTIAL: THIS DOCUMENT AND THE INFORMATION CONTAINED IN IT ARE CONFIDENTIAL AND CANNOT BE COPIED OR DISCLOSED IN WHOLE OR IN PART WITHOUT THE EXPRESS WRITTEN CONSENT OF TELVENT, INC.

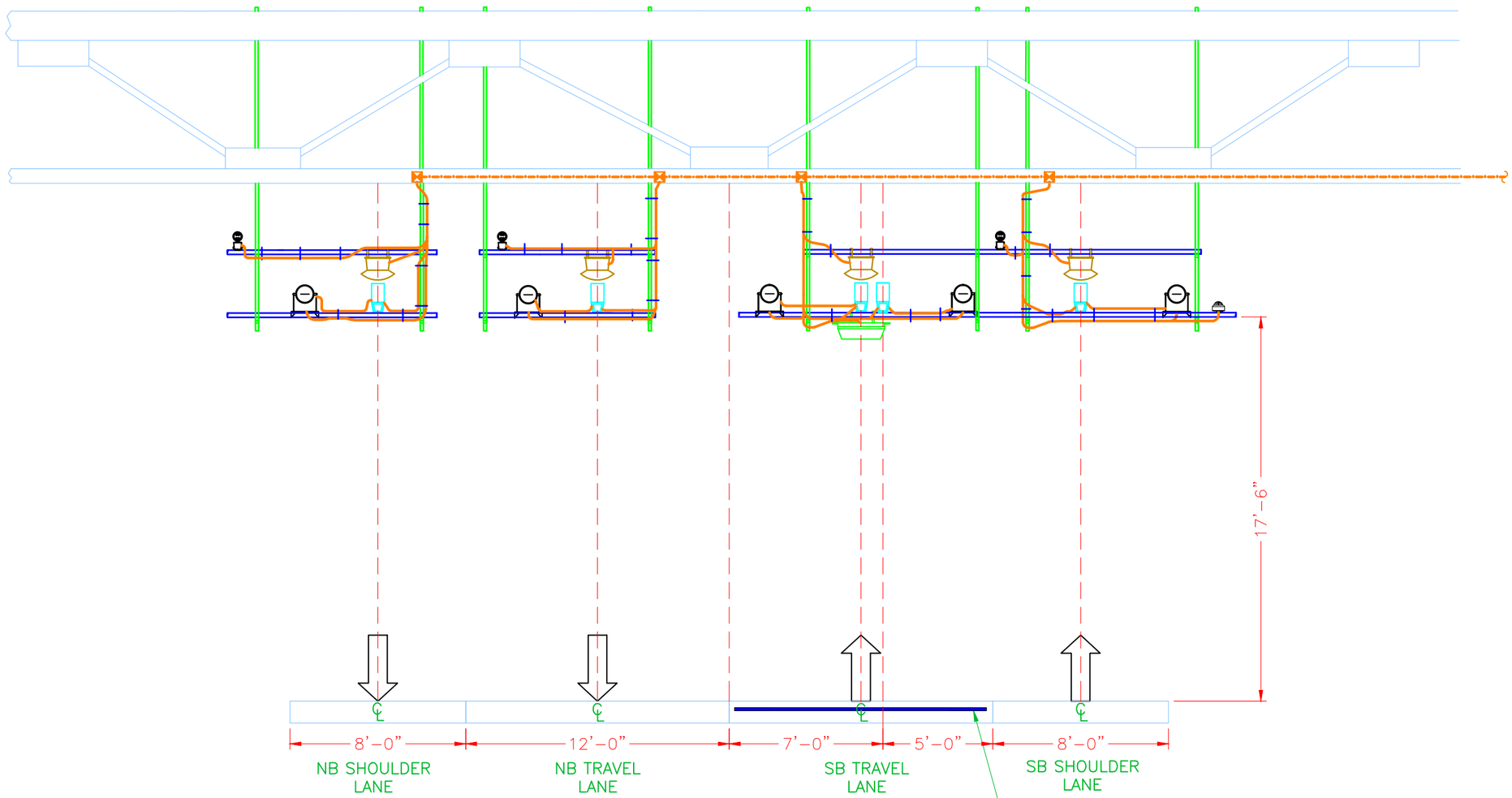

ELEVATION
MAINLANE
SOUTH GANTRY
SOUTHBOUND VIEW

0 3' 6' 12'

NOTES:

1. SEE MAINLANE ZONE LAYOUT SHEET FOR CONDUIT RUNS ASSOCIATED WITH THIS LAYOUT.
2. SEE MAINLANE CABLE SCHEDULE SHEET FOR CABLING ASSOCIATED WITH THIS LAYOUT.
3. DROP DOWN HANGARS CAN BE UNISTRUT. THEY SHALL BE FIXED/UNMOVABLE. THEY SHALL BE DESIGNED TO ELIMINATE VIBRATION AND MOVEMENT IN THE PITCH, ROLL AND YAW AXES.

PRELIMINARY / DRAFT

FOR REVIEW ONLY. NOT FOR BUILD OR DESIGN WITHOUT APPROVAL BY AUTHORIZED REPRESENTATIVE OF TELVENT ENGINEERING.

DATE	DESCRIPTION OF REVISION	NAME

TELVENT
211 E SEVENTH STREET, SUITE 800, AUSTIN, TEXAS 78701

NET RMA
TOLL 49, SEGMENT 3B
MAINLANE
RISER DETAIL SB VIEW

DATE: 5/10/2012 SHEET 6 OF 47 SHEETS

DESIGNED BY:
DRAWN BY: T. HAMMOND
CHECKED BY:

TELVENT CONFIDENTIAL: THIS DOCUMENT AND THE INFORMATION CONTAINED IN IT ARE CONFIDENTIAL AND CANNOT BE COPIED OR DISCLOSED IN WHOLE OR IN PART WITHOUT THE EXPRESS WRITTEN CONSENT OF **TELVENT, INC.**

NETRMA TOLL 49 SEGMENT 3B MAINLANE CABLE SCHEDULE

Cable ID	Conduit ID(s)	Run Description	Cable Mfr	Cable Model	Cable Description	Cable Diameter	Cable Area	Run Source	Connection	Run Destination	Connection	Length (feet) Southbound Lanes Shld 2	Southbound Lanes 2	Northbound Lanes 1	Northbound Lanes Shld 1
1	AA	Incoming Power	--	--	--	0	0.000	ILP Disc. Switch	--	Incoming Pwr GB	--	--	--	--	--
2	AB	Incoming Power	--	--	--	0	0.000	Incoming Pwr GB	--	Power Cabinet	--	--	--	--	--
3	AC	External Network	--	--	--	0	0.000	AT&T Drop	--	Incoming Comm GB	--	--	--	--	--
4	AD	External Network	--	--	--	0	0.000	Incoming Comm GB	--	Comms Cabinet	--	--	--	--	--
5	CA, DA	NB Treadle 1	MSI	4-1005798-4	Duplex Fiber Feeder Cable	0.200	0.031	Toll Cabinet	SMA-905	NB Treadle Riser 1	Field Splice			70	
6	CA, DB	NB Treadle 2	MSI	4-1005798-4	Duplex Fiber Feeder Cable	0.200	0.031	Toll Cabinet	SMA-905	NB Treadle Riser 2	Field Splice			70	
7	BC, DC	SB Treadle 1	MSI	4-1005798-4	Duplex Fiber Feeder Cable	0.200	0.031	Toll Cabinet	SMA-905	SB Treadle Riser 1	Field Splice		85		
8	BC, DD	SB Treadle 2	MSI	4-1005798-4	Duplex Fiber Feeder Cable	0.200	0.031	Toll Cabinet	SMA-905	SB Treadle Riser 2	Field Splice		85		
9	CA, CB	NB DVAS Comms Entry	Superior Essex	04-001-64	Burial Rated Cat 6	0.400	0.126	Toll Cabinet	RJ45	North Gantry NB Lane	RJ45			105	
10	CC, CD	NB DVAS Comms Exit	Superior Essex	04-001-64	Burial Rated Cat 6	0.400	0.126	Toll Cabinet	RJ45	South Gantry NB Lane	RJ45			105	
11	CC, CD	SB DVAS Comms Entry	Superior Essex	04-001-64	Burial Rated Cat 6	0.400	0.126	Toll Cabinet	RJ45	South Gantry SB Lane	RJ45		115		
12	CA, CB	SB DVAS Comms Exit	Superior Essex	04-001-64	Burial Rated Cat 6	0.400	0.126	Toll Cabinet	RJ45	North Gantry SB Lane	RJ45		115		
13	CC, CD	Pad DVAS Comms	Superior Essex	04-001-64	Burial Rated Cat 6	0.400	0.126	Toll Cabinet	RJ45	South Gantry NB Shld	RJ45				95
14	BA, BB	NB DVAS Power Entry	Belden	7993A	18 AWG, 4 Conductor	0.218	0.037	Toll Cabinet	Terminal	North Gantry NB Lane	Field Splice			105	
15	BC, BD	NB DVAS Power Exit	Belden	7993A	18 AWG, 4 Conductor	0.218	0.037	Toll Cabinet	Terminal	South Gantry NB Lane	Field Splice			105	
16	BC, BD	SB DVAS Power Entry	Belden	7993A	18 AWG, 4 Conductor	0.218	0.037	Toll Cabinet	Terminal	South Gantry SB Lane	Field Splice		115		
17	BA, BB	SB DVAS Power Exit	Belden	7993A	18 AWG, 4 Conductor	0.218	0.037	Toll Cabinet	Terminal	North Gantry SB Lane	Field Splice		115		
18	BC, BD	Pad DVAS Power	Belden	7993A	18 AWG, 4 Conductor	0.218	0.037	Toll Cabinet	Terminal	South Gantry NB Shld	Field Splice				95
19	CC, CD	Light Sensor Comm	Superior Essex	04-001-64	Burial Rated Cat 6	0.400	0.126	Toll Cabinet	Terminal	South Gantry NB Shld	Field Splice				95
20	BC, BD	Light Sensor Power	Belden	7993A	18 AWG, 4 Conductor	0.218	0.037	Toll Cabinet	Terminal	South Gantry NB Shld	Field Splice				95
21	CA, CB	NB Shoulder Entry VES Camera Comm	Superior Essex	04-001-64	Burial Rated Cat 6	0.400	0.126	Toll Cabinet	Terminal	North Gantry NB Shld	Field Splice				95
22	CC, CD	NB Shoulder Exit VES Camera Comm	Superior Essex	04-001-64	Burial Rated Cat 6	0.400	0.126	Toll Cabinet	Terminal	South Gantry NB Shld	Field Splice				95
23	CA, CB	NB Lane Entry VES Camera Comm	Superior Essex	04-001-64	Burial Rated Cat 6	0.400	0.126	Toll Cabinet	Terminal	North Gantry NB Lane	Field Splice			105	
24	CC, CD	NB Lane Exit VES Camera Comm	Superior Essex	04-001-64	Burial Rated Cat 6	0.400	0.126	Toll Cabinet	Terminal	South Gantry NB Lane	Field Splice			105	
25	CA, CB	NB Wrong-Way VES Camera Comm	Superior Essex	04-001-64	Burial Rated Cat 6	0.400	0.126	Toll Cabinet	Terminal	North Gantry NB Lane	Field Splice			105	
26	CC, CD	SB Shoulder Entry VES Camera Comm	Superior Essex	04-001-64	Burial Rated Cat 6	0.400	0.126	Toll Cabinet	Terminal	South Gantry SB Shld	Field Splice	125			
27	CA, CB	SB Shoulder Exit VES Camera Comm	Superior Essex	04-001-64	Burial Rated Cat 6	0.400	0.126	Toll Cabinet	Terminal	North Gantry SB Shld	Field Splice	125			
28	CC, CD	SB Lane Entry VES Camera Comm	Superior Essex	04-001-64	Burial Rated Cat 6	0.400	0.126	Toll Cabinet	Terminal	South Gantry SB Lane	Field Splice		115		
29	CA, CB	SB Lane Exit VES Camera Comm	Superior Essex	04-001-64	Burial Rated Cat 6	0.400	0.126	Toll Cabinet	Terminal	North Gantry SB Lane	Field Splice		115		
30	CC, CD	SB Wrong-Way VES Camera Comm	Superior Essex	04-001-64	Burial Rated Cat 6	0.400	0.126	Toll Cabinet	Terminal	South Gantry SB Lane	Field Splice		115		
31	BA, BB	NB Shoulder Entry VES Camera Power	Belden	7993A	18 AWG, 4 Conductor	0.218	0.037	Toll Cabinet	Terminal	North Gantry NB Shld	Field Splice				95
32	BC, BD	NB Shoulder Exit VES Camera Power	Belden	7993A	18 AWG, 4 Conductor	0.218	0.037	Toll Cabinet	Terminal	South Gantry NB Shld	Field Splice				95
33	BA, BB	NB Lane Entry VES Camera Power	Belden	7993A	18 AWG, 4 Conductor	0.218	0.037	Toll Cabinet	Terminal	North Gantry NB Lane	Field Splice			105	
34	BC, BD	NB Lane Exit VES Camera Power	Belden	7993A	18 AWG, 4 Conductor	0.218	0.037	Toll Cabinet	Terminal	South Gantry NB Lane	Field Splice			105	
35	BA, BB	NB Wrong-Way VES Camera Power	Belden	7993A	18 AWG, 4 Conductor	0.218	0.037	Toll Cabinet	Terminal	North Gantry NB Lane	Field Splice			105	
36	BC, BD	SB Shoulder Entry VES Camera Power	Belden	7993A	18 AWG, 4 Conductor	0.218	0.037	Toll Cabinet	Terminal	South Gantry SB Shld	Field Splice	125			
37	BA, BB	SB Shoulder Exit VES Camera Power	Belden	7993A	18 AWG, 4 Conductor	0.218	0.037	Toll Cabinet	Terminal	North Gantry SB Shld	Field Splice	125			
38	BC, BD	SB Lane Entry VES Camera Power	Belden	7993A	18 AWG, 4 Conductor	0.218	0.037	Toll Cabinet	Terminal	South Gantry SB Lane	Field Splice		115		
39	BA, BB	SB Lane Exit VES Camera Power	Belden	7993A	18 AWG, 4 Conductor	0.218	0.037	Toll Cabinet	Terminal	North Gantry SB Lane	Field Splice		115		
40	BC, BD	SB Wrong-Way VES Camera Power	Belden	7993A	18 AWG, 4 Conductor	0.218	0.037	Toll Cabinet	Terminal	South Gantry SB Lane	Field Splice		115		
41	BA, BB	NB Shoulder Entry VES Strobe Power	Belden	7993A	18 AWG, 4 Conductor	0.218	0.037	Toll Cabinet	Terminal	North Gantry NB Shld	Field Splice				95
42	BC, BD	NB Shoulder Exit VES Strobe Power	Belden	7993A	18 AWG, 4 Conductor	0.218	0.037	Toll Cabinet	Terminal	South Gantry NB Shld	Field Splice				95
43	BA, BB	NB Lane Entry VES Strobe Power	Belden	7993A	18 AWG, 4 Conductor	0.218	0.037	Toll Cabinet	Terminal	North Gantry NB Lane	Field Splice			105	
44	BC, BD	NB Lane Exit VES Strobe Power	Belden	7993A	18 AWG, 4 Conductor	0.218	0.037	Toll Cabinet	Terminal	South Gantry NB Lane	Field Splice			105	
45	BA, BB	NB Wrong-Way VES Strobe Power	Belden	7993A	18 AWG, 4 Conductor	0.218	0.037	Toll Cabinet	Terminal	North Gantry NB Lane	Field Splice			105	
46	BC, BD	SB Shoulder Entry VES Strobe Power	Belden	7993A	18 AWG, 4 Conductor	0.218	0.037	Toll Cabinet	Terminal	South Gantry SB Shld	Field Splice	125			
47	BA, BB	SB Shoulder Exit VES Strobe Power	Belden	7993A	18 AWG, 4 Conductor	0.218	0.037	Toll Cabinet	Terminal	North Gantry SB Shld	Field Splice	125			
48	BC, BD	SB Lane Entry VES Strobe Power	Belden	7993A	18 AWG, 4 Conductor	0.218	0.037	Toll Cabinet	Terminal	South Gantry SB Lane	Field Splice		115		
49	BA, BB	SB Lane Exit VES Strobe Power	Belden	7993A	18 AWG, 4 Conductor	0.218	0.037	Toll Cabinet	Terminal	North Gantry SB Lane	Field Splice		115		
50	BC, BD	SB Wrong-Way VES Strobe Power	Belden	7993A	18 AWG, 4 Conductor	0.218	0.037	Toll Cabinet	Terminal	South Gantry SB Lane	Field Splice		115		
51	CC, CD	NB Shoulder Entry Scanner Comm	Superior Essex	04-001-64	Burial Rated Cat 6	0.400	0.126	Toll Cabinet	Terminal	South Gantry NB Shld	Field Splice				95
52	CA, CB	NB Shoulder Exit Scanner Comm	Superior Essex	04-001-64	Burial Rated Cat 6	0.400	0.126	Toll Cabinet	Terminal	North Gantry NB Shld	Field Splice				95
53	CC, CD	NB Lane Entry Scanner Comm	Superior Essex	04-001-64	Burial Rated Cat 6	0.400	0.126	Toll Cabinet	Terminal	South Gantry NB Lane	Field Splice			105	
54	CA, CB	NB Lane Exit Scanner Comm	Superior Essex	04-001-64	Burial Rated Cat 6	0.400	0.126	Toll Cabinet	Terminal	North Gantry NB Lane	Field Splice			105	
55	CA, CB	SB Shoulder Entry Scanner Comm	Superior Essex	04-001-64	Burial Rated Cat 6	0.400	0.126	Toll Cabinet	Terminal	North Gantry SB Shld	Field Splice	125			
56	CC, CD	SB Shoulder Exit Scanner Comm	Superior Essex	04-001-64	Burial Rated Cat 6	0.400	0.126	Toll Cabinet	Terminal	South Gantry SB Shld	Field Splice	125			
57	CA, CB	SB Lane Entry Scanner Comm	Superior Essex	04-001-64	Burial Rated Cat 6	0.400	0.126	Toll Cabinet	Terminal	North Gantry SB Lane	Field Splice		115		
58	CC, CD	SB Lane Exit Scanner Comm	Superior Essex	04-001-64	Burial Rated Cat 6	0.400	0.126	Toll Cabinet	Terminal	South Gantry SB Lane	Field Splice		115		
59	BC, BD	NB Shoulder Entry Scanner Power	Belden	7993A	18 AWG, 4 Conductor	0.218	0.037	Toll Cabinet	Terminal	South Gantry NB Shld	Field Splice				95
60	BA, BB	NB Shoulder Exit Scanner Power	Belden	7993A	18 AWG, 4 Conductor	0.218	0.037	Toll Cabinet	Terminal	North Gantry NB Shld	Field Splice				95
61	BC, BD	NB Lane Entry Scanner Power	Belden	7993A	18 AWG, 4 Conductor	0.218	0.037	Toll Cabinet	Terminal	South Gantry NB Lane	Field Splice			105	
62	BA, BB	NB Lane Exit Scanner Power	Belden	7993A	18 AWG, 4 Conductor	0.218	0.037	Toll Cabinet	Terminal	North Gantry NB Lane	Field Splice			105	
63	BA, BB	SB Shoulder Entry Scanner Power	Belden	7993A	18 AWG, 4 Conductor	0.218	0.037	Toll Cabinet	Terminal	North Gantry SB Shld	Field Splice	125			
64	BC, BD	SB Shoulder Exit Scanner Power	Belden	7993A	18 AWG, 4 Conductor	0.218	0.037	Toll Cabinet	Terminal	South Gantry SB Shld	Field Splice	125			
65	BA, BB	SB Lane Entry Scanner Power	Belden	7993A	18 AWG, 4 Conductor	0.218	0.037	Toll Cabinet	Terminal	North Gantry SB Lane	Field Splice		115		
66	BC, BD	SB Lane Exit Scanner Power	Belden	7993A	18 AWG, 4 Conductor	0.218	0.037	Toll Cabinet	Terminal	South Gantry SB Lane	Field Splice		115		
67	CB	NB AVI Antenna	Times Microwave	LMR-600	Low Loss Coax Cable	0.59	0.273	NB Reader Cabinet	N-Type Male	North Gantry NB Lane	N-Type Male			50	
68	CD	SB AVI Antenna	Times Microwave	LMR-600	Low Loss Coax Cable	0.59	0.273	SB Reader Cabinet	N-Type Male	South Gantry SB Lane	N-Type Male		90		
69	CA, CB	NB AVI Reader Comm	Superior Essex	04-001-64	Burial Rated Cat 6	0.400	0.126	Toll Cabinet	RJ45	NB Reader Cabinet	RJ45			55	
70	CC, CD	SB AVI Reader Comm	Superior Essex	04-001-64	Burial Rated Cat 6	0.400	0.126	Toll Cabinet	RJ45	SB Reader Cabinet	RJ45		55		
71	BA, BB	NB AVI Reader Power	Belden	7993A	18 AWG, 4 Conductor	0.218	0.037	Toll Cabinet	Terminal	NB Reader Cabinet	Field Splice			55	
72	BC, BD	SB AVI Reader Power	Belden	7993A	18 AWG, 4 Conductor	0.218	0.037	Toll Cabinet	Terminal	SB Reader Cabinet	Field Splice		55		

Cable Manufacturer	Cable Part Number	Cable Description	Total Length (feet)
Belden	7993A	18 AWG, 4 Conductor	3820
Times Microware	LMR-600	Low Loss Coax Cable	140
Superior Essex	04-001-64	Burial Rated Cat 6	2720
MSI	4-1005798-4	Duplex Fiber Feeder Cable	310
Field Components	FCW10F1106NF	6-Strand Multi-mode Fiber	0

Conduit Summary

Conduit ID	AA	AB	AC	AD	BA	BB	BC	BD	CA	CB	CC	CD	DA	DB	DC	DD
Description	Incoming power	Incoming power	Incoming Comms	Incoming Comms	Cabinet power to north gantry power GB	North gantry power GB to north gantry	Cabinet power to south gantry power GB	South gantry power GB to south gantry	Cabinet comms to north gantry comms GB	North gantry comms GB to north gantry	Cabinet comms to south gantry comms GB	South gantry comms GB to south gantry	North gantry comms GB to NB Treadle riser #1	North gantry comms GB to NB Treadle riser #2	South gantry comms GB to SB Treadle riser #1	South gantry comms GB to SB Treadle riser #2
Cable Count	1	1	1	1	12	12	16	14	13	11	12	12	1	1	1	1
Total Cable Area (sq.in.)	0.000	0.000	0.000	0.000	0.448	0.448	0.585	0.523	1.445	1.382	1.508	1.508	0.031	0.031	0.031	0.031
Conduit Quantity	1	1	1	1	1	1	1	1	1	1	1	1	1	1	1	1
Conduit Diameter (in.)	2	2	2	2	4	4	4	4	4	4	4	4	2	2	2	2
Allowable Fill (%)	40%	40%	40%	40%	40%	40%	40%	40%	40%	40%	40%	40%	40%	40%	40%	40%
Actual Fill (%)	0.0%	0.0%	0.0%	0.0%	11.2%	11.2%	14.6%	13.1%	36.1%	34.6%	37.7%	37.7%	1.6%	1.6%	1.6%	1.6%

PRELIMINARY / DRAFT

FOR REVIEW ONLY. NOT FOR BUILD OR DESIGN WITHOUT APPROVAL BY AUTHORIZED REPRESENTATIVE OF TELVENT ENGINEERING.

DATE	DESCRIPTION OF REVISION	NAME

TELVENT
211 E SEVENTH STREET, SUITE 800, AUSTIN, TEXAS 78701

NET RMA
TOLL 49, SEGMENT 3B
MAINLANE
CABLE SCHEDULE

DATE: 5/10/2012 SHEET 7 OF 47 SHEETS

DESIGNED BY:
DRAWN BY: T. HAMMOND
CHECKED BY:

TELVENT CONFIDENTIAL: THIS DOCUMENT AND THE INFORMATION CONTAINED IN IT ARE CONFIDENTIAL AND CANNOT BE COPIED OR DISCLOSED IN WHOLE OR IN PART WITHOUT THE EXPRESS WRITTEN CONSENT OF TELVENT, INC.

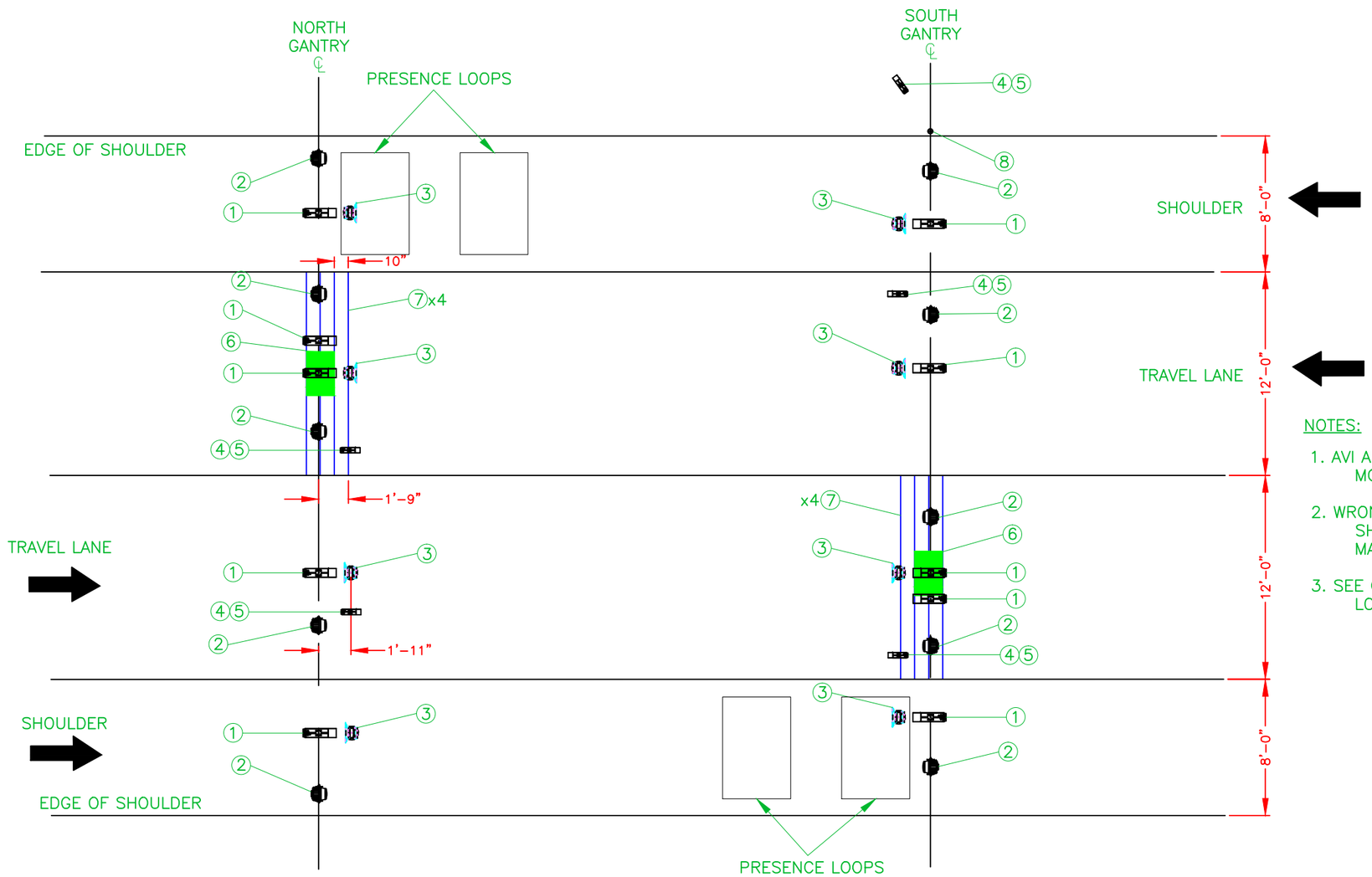

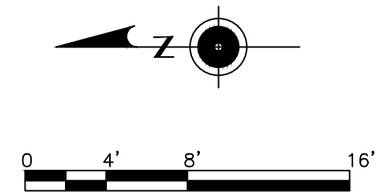

NOTES:

1. AVI ANTENNA, SICK SCANNER AND REAR LICENSE PLATE VES CAMERA MOUNTED OVER CENTERLINE OF TRAVEL LANES AND SHOULDER LANES.
2. WRONG-WAY VES CAMERAS ARE MOUNTED 13 FEET FROM THE EDGE OF THE SHOULDER AND 7 FEET FROM THE DIRECTIONAL CENTERLINE. SEE RESPECTIVE MAINLANE RISER DETAIL SHEETS.
3. SEE CRITICAL DIMENSION DIAGRAM FOR DETAILED DIMENSIONS OF EQUIPMENT LOCATION RELATIVE TO LICENSE PLATE IMAGE CAPTURE TRIGGER POINT.

ITEM NO.	NB QTY	SB QTY	PART NUMBER	NOMENCLATURE OR DESCRIPTION	MANUFACTURER
8	1	0	31014203	TLS-300, Dynamic Traffic Light Sensor with mounting plate and 12VDC/25W DC heaters.	JAI
7	4	4	SPZ-300-1-50	SPZ FO SENSOR, 3.5M w/ 50 Meters Passive Cable, with Connectors	MSI
6	1	1	12-3152-002	AA3152 UTA ANTENNA WITH CHECK TAG	TRANSCORE
5	3	2	AT-15	SUPPLEMENTAL IR LIGHTING, 850NM	AXTON
4	3	2	BIP2-1300C-DN	1.3 MEGAPIXEL (1280x960), IP CAMERA, DAY/NIGHT	BASLER
3	4	4	LMS511-10100 PRO	SICK SCANNER	SICK
2	5	5	31015343	TNF-31, TRAFFIC NIGHT FLASH WITH 6FT CABLE, POWER SUPPLY INSIDE ENCLOSURE.	JAI
1	5	5	31015330	VIS 500 CAMERA ASSEMBLY	JAI

PRELIMINARY / DRAFT

FOR REVIEW ONLY. NOT FOR BUILD OR DESIGN WITHOUT APPROVAL BY AUTHORIZED REPRESENTATIVE OF TELVENT ENGINEERING.

DATE	DESCRIPTION OF REVISION	NAME

TELVENT
211 E SEVENTH STREET, SUITE 800, AUSTIN, TEXAS 78701

NET RMA
TOLL 49, SEGMENT 3B
MAINLANE
PLAN VIEW

DATE: 5/10/2012

DESIGNED BY:
DRAWN BY: T. HAMMOND
CHECKED BY:

TELVENT CONFIDENTIAL: THIS DOCUMENT AND THE INFORMATION CONTAINED IN IT ARE CONFIDENTIAL AND CANNOT BE COPIED OR DISCLOSED IN WHOLE OR IN PART WITHOUT THE EXPRESS WRITTEN CONSENT OF TELVENT, INC.

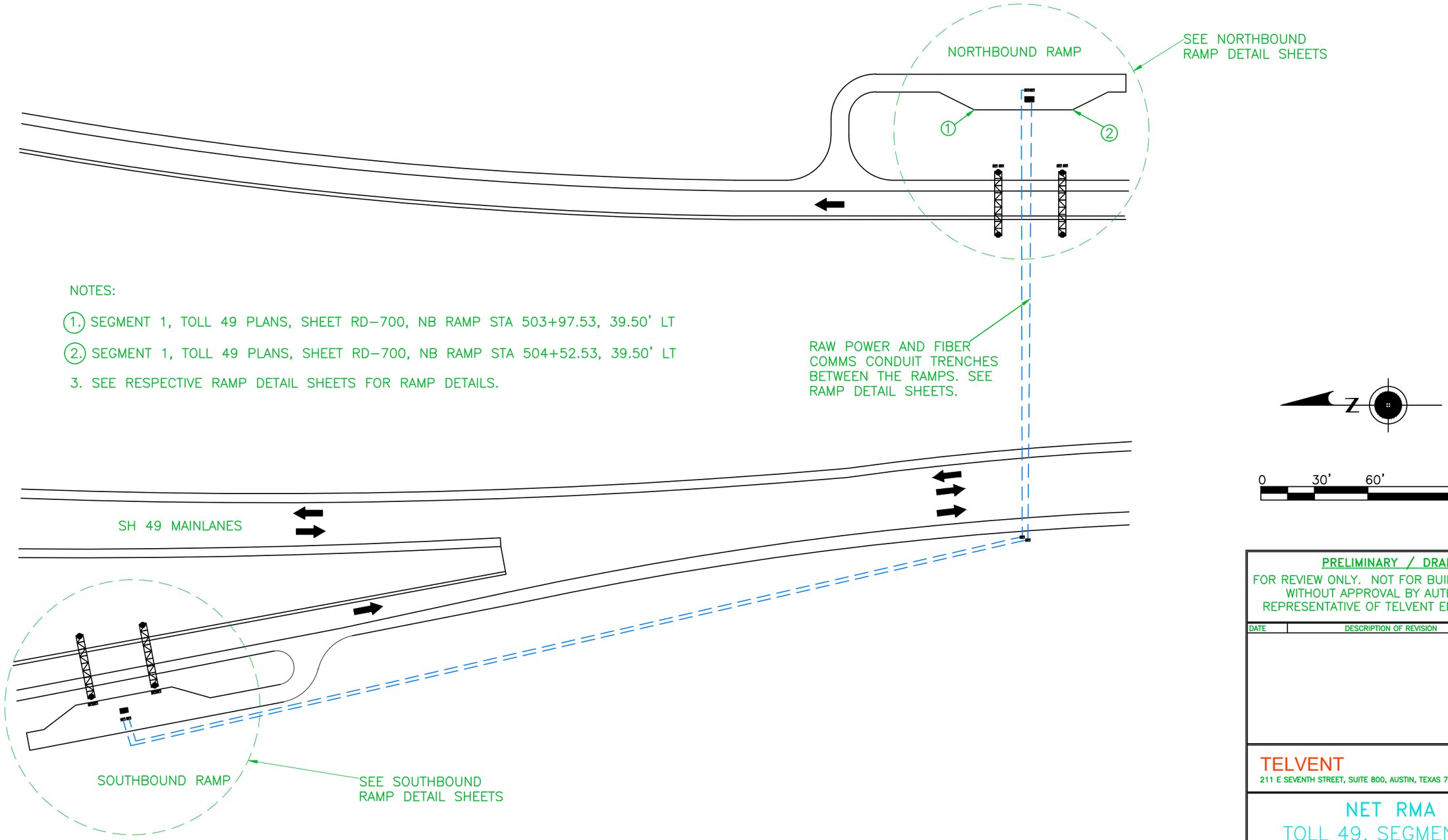

NOTES:

1. SEGMENT 1, TOLL 49 PLANS, SHEET RD-700, NB RAMP STA 503+97.53, 39.50' LT
2. SEGMENT 1, TOLL 49 PLANS, SHEET RD-700, NB RAMP STA 504+52.53, 39.50' LT
3. SEE RESPECTIVE RAMP DETAIL SHEETS FOR RAMP DETAILS.

PRELIMINARY / DRAFT

FOR REVIEW ONLY. NOT FOR BUILD OR DESIGN WITHOUT APPROVAL BY AUTHORIZED REPRESENTATIVE OF TELVENT ENGINEERING.

DATE	DESCRIPTION OF REVISION	NAME

TELVENT
211 E SEVENTH STREET, SUITE 800, AUSTIN, TEXAS 78701

NET RMA
TOLL 49, SEGMENT 3B NB & SB RAMP ZONES PROXIMITY LAYOUT

DATE: 5/10/2012

DESIGNED BY:
DRAWN BY: T. HAMMOND
CHECKED BY:

TELVENT CONFIDENTIAL: THIS DOCUMENT AND THE INFORMATION CONTAINED IN IT ARE CONFIDENTIAL AND CANNOT BE COPIED OR DISCLOSED IN WHOLE OR IN PART WITHOUT THE EXPRESS WRITTEN CONSENT OF **TELVENT, INC.**

NOTES:

1. SEGMENT 1, TOLL 49 PLANS, SHEET RD–700, NB RAMP STA 503+97.53, 39.50' LT
2. SEGMENT 1, TOLL 49 PLANS, SHEET RD–700, NB RAMP STA 504+52.53, 39.50' LT
3. CONNECTS TO THE INTERMEDIATE GB AND RAMP CONNECTION GROUND BOX ON THE SB RAMP. SEE SHEET 7/16 FOR RAMP PROXIMITIES.
4. TREADLE RISER LOCATED AT STA 504+5.86, 1.00' LT
5. TREADLE RISER LOCATED AT STA 504+7.53, 1.00' LT
6. THE AVI READER CABINET IS AFIXED TO THE GANTRY COLUMN (BY OTHERS) APPROXIMATELY 4 FEET ABOVE GROUND LEVEL. POWER AND COMMS CONDUITS ARE TAPPED FROM THE COLUMN CONDUITS (BY OTHERS). THE CABINET SHALL BE PLACED SO THAT PERSONNEL ACCESSING IT WILL HAVE THE COLUMN BETWEEN THEM AND ONCOMING TRAFFIC.

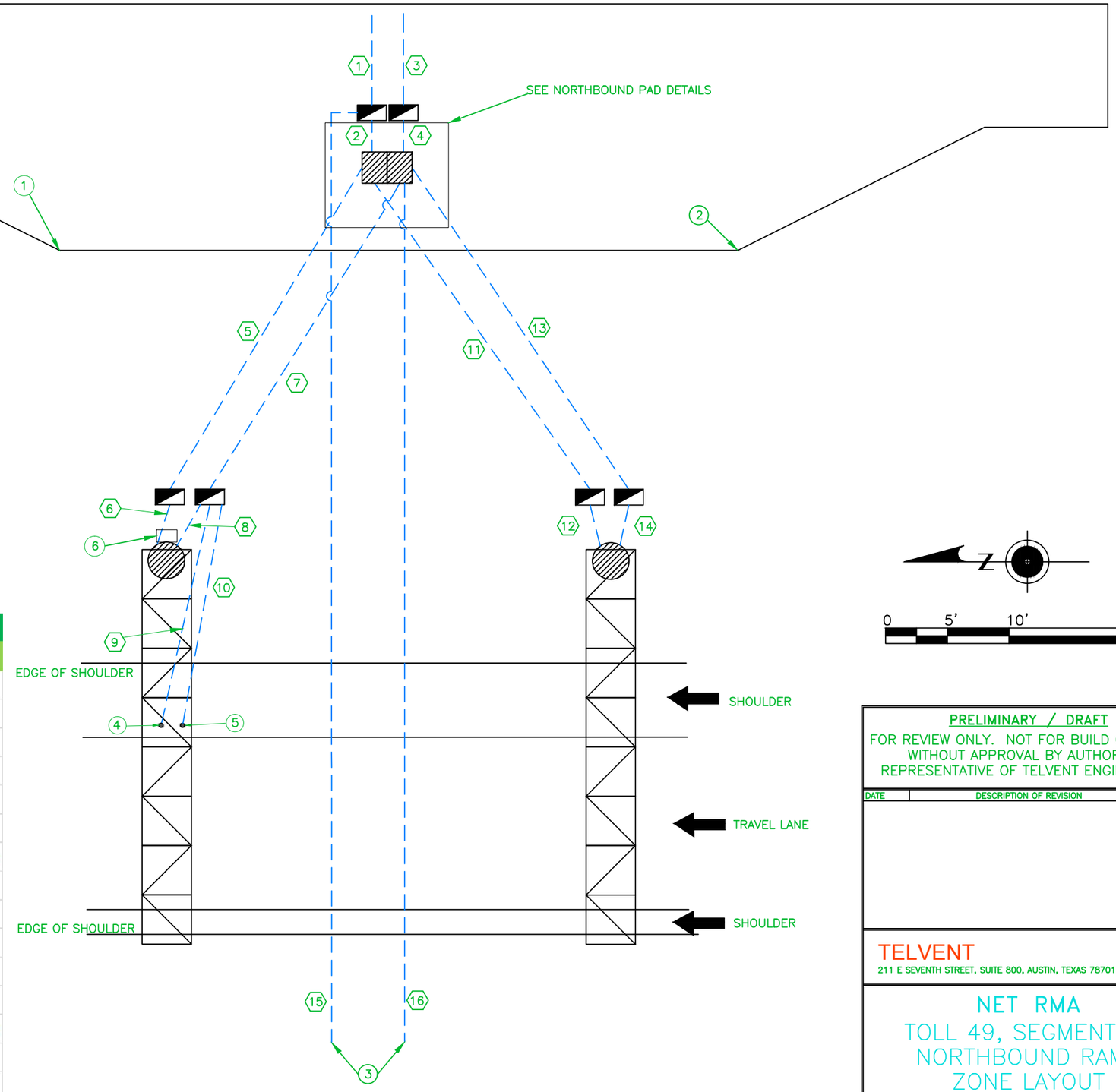

NORTHBOUND RAMP CONDUIT DESIGNATIONS					
RUN #	Conduit ID	QTY 2"	QTY 3"	QTY 4"	Description
1	AA	--	1	--	INCOMING POWER - BY OTHERS
2	AB	--	1	--	INCOMING POWER - BY OTHERS
3	AC	1	--	--	INCOMING COMMS - BY OTHERS
4	AD	1	--	--	INCOMING COMMS - BY OTHERS
5	BA	--	--	1	CABINET POWER TO NORTH GANTRY POWER GB
6	BB	--	--	1	NORTH GANTRY POWER GB TO NORTH GANTRY
7	CA	--	--	1	CABINET COMMS TO NORTH GANTRY COMMS GB
8	CB	--	--	1	NORTH GANTRY COMMS GB TO NORTH GANTRY
9	DA	1	--	--	NORTH GANTRY COMMS GB TO TREADLE RISER
10	DB	1	--	--	NORTH GANTRY COMMS GB TO TREADLE RISER
11	BC	--	--	1	CABINET POWER TO SOUTH GANTRY POWER GB
12	BD	--	--	1	SOUTH GANTRY POWER GB TO SOUTH GANTRY
13	CC	--	--	1	CABINET COMMS TO SOUTH GANTRY COMMS GB
14	CD	--	--	1	SOUTH GANTRY COMMS GB TO SOUTH GANTRY
15	EA	--	1	--	RAW POWER BETWEEN RAMPS - BY OTHERS
16	EB	1	--	--	FIBER COMMS BETWEEN RAMPS

PRELIMINARY / DRAFT

FOR REVIEW ONLY. NOT FOR BUILD OR DESIGN WITHOUT APPROVAL BY AUTHORIZED REPRESENTATIVE OF TELVENT ENGINEERING.

DATE	DESCRIPTION OF REVISION	NAME

TELVENT
211 E SEVENTH STREET, SUITE 800, AUSTIN, TEXAS 78701

NET RMA
TOLL 49, SEGMENT 3B NORTHBOUND RAMP ZONE LAYOUT

DATE: 5/10/2012 SHEET 1 OF 47 SHEETS

DESIGNED BY:
DRAWN BY: T.HAMMOND
CHECKED BY:

TELVENT CONFIDENTIAL: THIS DOCUMENT AND THE INFORMATION CONTAINED IN IT ARE CONFIDENTIAL AND CANNOT BE COPIED OR DISCLOSED IN WHOLE OR IN PART WITHOUT THE EXPRESS WRITTEN CONSENT OF TELVENT, INC.

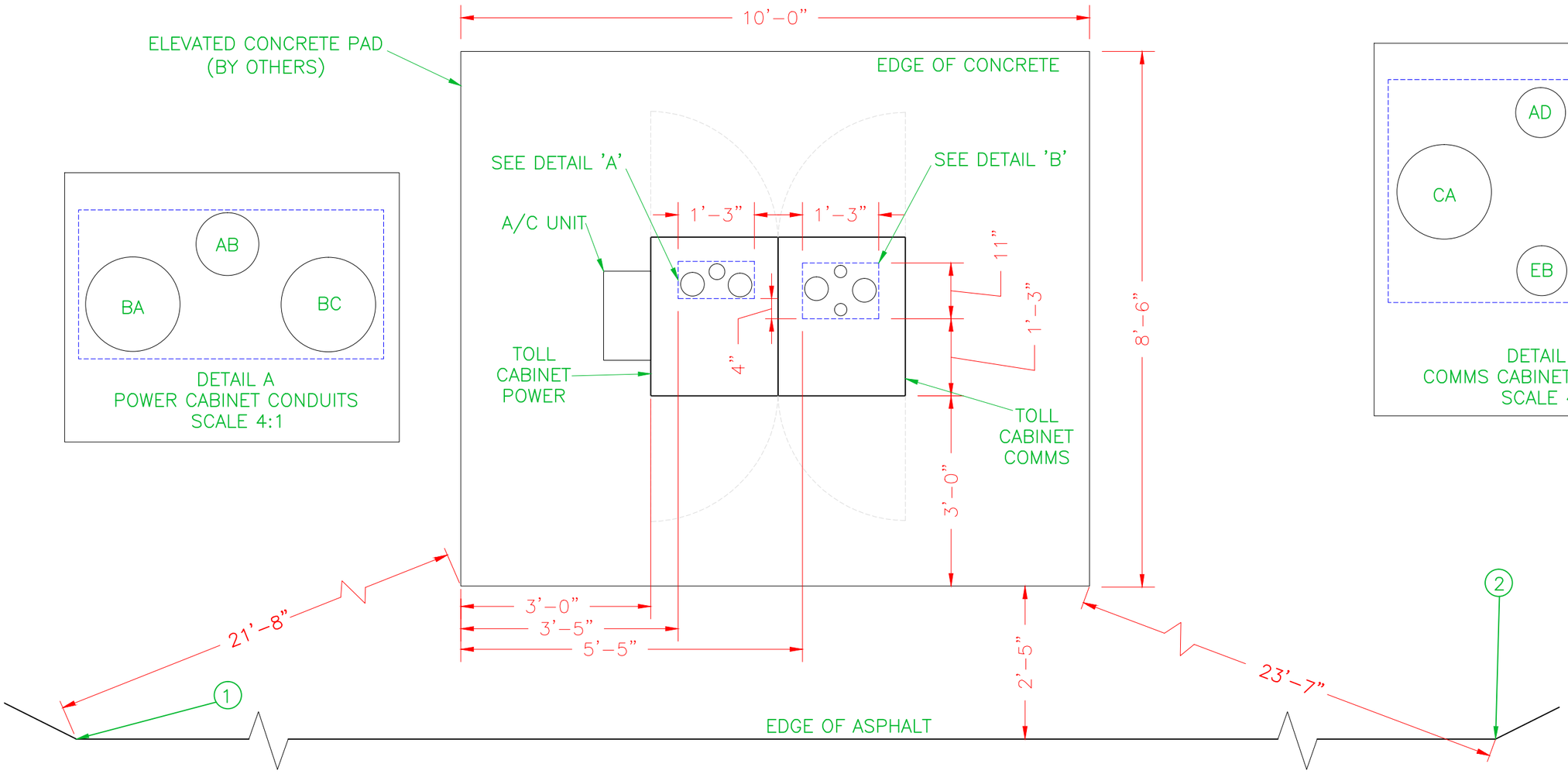

DETAIL A
POWER CABINET CONDUITS
SCALE 4:1

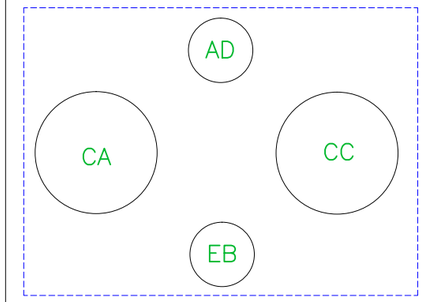

DETAIL B
COMMS CABINET CONDUITS
SCALE 4:1

NOTES:

1. SEGMENT 1, TOLL 49 PLANS, SHEET RD-700, NB RAMP STA 503+97.53, 39.50' LT
2. SEGMENT 1, TOLL 49 PLANS, SHEET RD-700, NB RAMP STA 504+52.53, 39.50' LT
3. ALL CONDUIT STUB OUTS SHALL HAVE MINIMUM 1 INCH CLEARANCE FROM OTHER STUB OUTS. ALL CONDUIT TO BE INSTALLED PER NEC CODE.
4. ALL CONDUIT STUB OUTS SHALL EXTEND 6-10 INCHES ABOVE FINISHED SURFACE.
5. CONDUITS WITHIN A DEFINED ZONE MUST FALL WITHIN THAT ZONE FOR THEIR FULL HEIGHT.
6. THE ELEVATED CONCRETE PAD SHALL EXTEND NO LESS THAN THREE FEET FROM EACH SIDE OF THE TOLLING CABINET.
7. SEE NB RAMP ZONE LAYOUT FOR ADDITIONAL CONDUIT DETAILS.

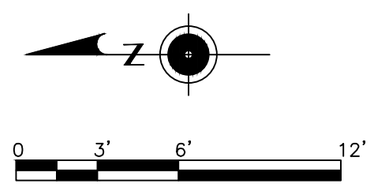

PRELIMINARY / DRAFT

FOR REVIEW ONLY. NOT FOR BUILD OR DESIGN WITHOUT APPROVAL BY AUTHORIZED REPRESENTATIVE OF TELVENT ENGINEERING.

DATE	DESCRIPTION OF REVISION	NAME

TELVENT
211 E SEVENTH STREET, SUITE 800, AUSTIN, TEXAS 78701

NET RMA
TOLL 49, SEGMENT 3B
NORTHBOUND RAMP
PAD LAYOUT

DATE: 5/10/2012 SHEET 11 OF 47 SHEETS

DESIGNED BY:
DRAWN BY: T. HAMMOND
CHECKED BY:

TELVENT CONFIDENTIAL: THIS DOCUMENT AND THE INFORMATION CONTAINED IN IT ARE CONFIDENTIAL AND CANNOT BE COPIED OR DISCLOSED IN WHOLE OR IN PART WITHOUT THE EXPRESS WRITTEN CONSENT OF **TELVENT, INC.**

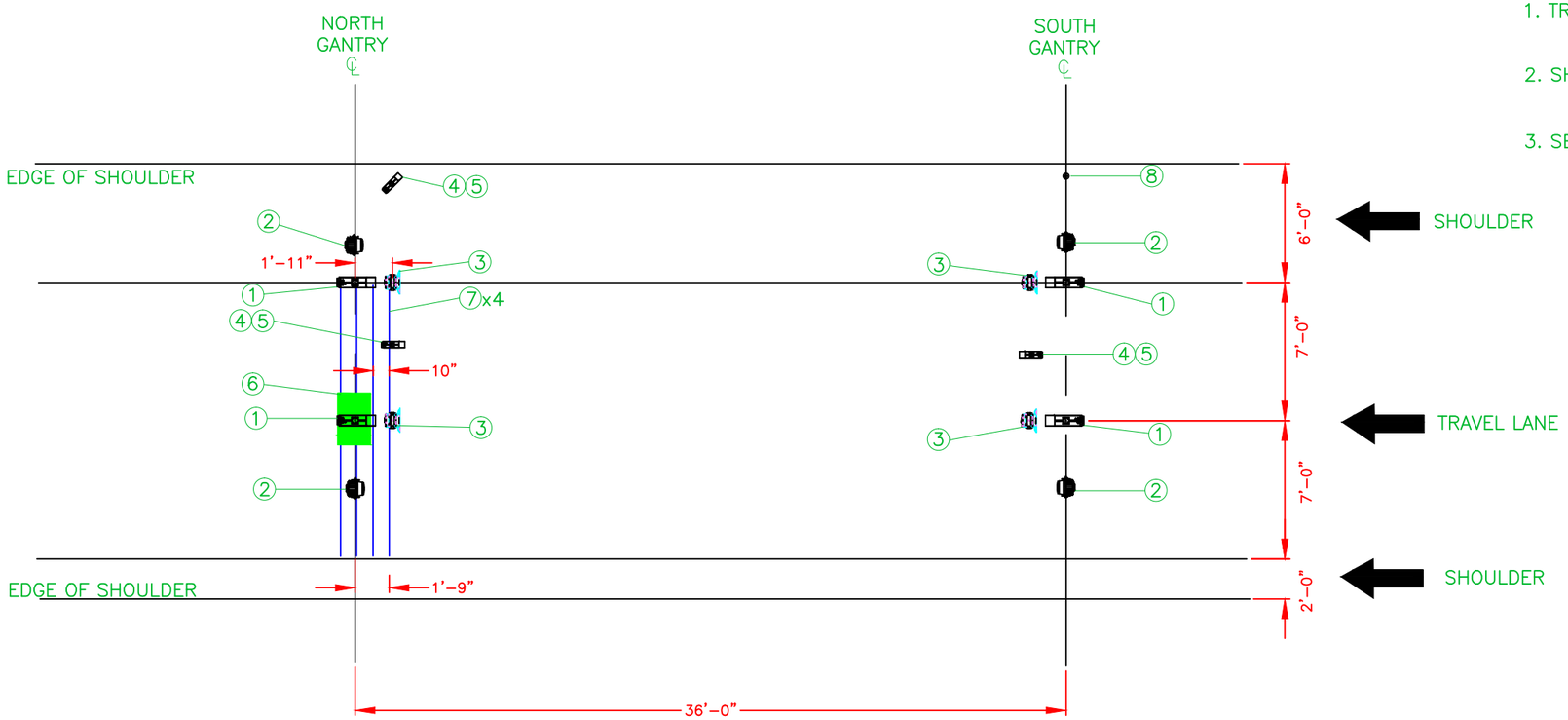

NOTES:

1. TRAVEL LANE SICK SCANNERS AND LICENSE PLATE VES CAMERAS MOUNTED OVER THE LANE CENTERLINE.
2. SHOULDER SICK SCANNERS AND LICENSE PLATE VES CAMERAS MOUNTED OVER THE LANE/SHOULDER DIVIDING STRIPE.
3. SEE CRITICAL DIMENSION DIAGRAM FOR DETAILED DIMENSIONS OF EQUIPMENT LOCATION RELATIVE TO LICENSE PLATE IMAGE CAPTURE TRIGGER POINT.

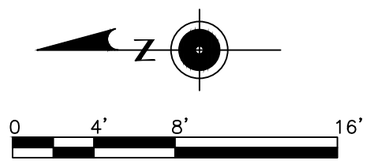

ITEM NO.	QTY REQ'D	PART NUMBER	NOMENCLATURE OR DESCRIPTION	MANUFACTURER
8	1	31014203	TLS-300, Dynamic Traffic Light Sensor with mounting plate and 12VDC/25W DC heaters.	JAI
7	4	SPZ-400-1-50	SPZ FO SENSOR, 4.0M w/ 50 Meters Passive Cable, with Connectors	MSI
6	1	12-3152-002	AA3152 UTA ANTENNA WITH CHECK TAG	TRANSCORE
5	3	AT-15	SUPPLEMENTAL IR LIGHTING, 850NM	AXTON
4	3	BIP2-1300C-DN	1.3 MEGAPIXEL (1280x960), IP CAMERA, DAY/NIGHT	BASLER
3	4	LMS511-10100 PRO	SICK SCANNER	SICK
2	4	31015343	TNF-31, TRAFFIC NIGHT FLASH WITH 6FT CABLE, POWER SUPPLY INSIDE ENCLOSURE.	JAI
1	4	31015330	VIS 500 CAMERA ASSEMBLY	JAI

PRELIMINARY / DRAFT

FOR REVIEW ONLY. NOT FOR BUILD OR DESIGN WITHOUT APPROVAL BY AUTHORIZED REPRESENTATIVE OF TELVENT ENGINEERING.

DATE	DESCRIPTION OF REVISION	NAME

TELVENT
211 E SEVENTH STREET, SUITE 800, AUSTIN, TEXAS 78701

NET RMA
TOLL 49, SEGMENT 3B
NORTHBOUND RAMP
PLAN VIEW

DATE: 5/10/2012 SHEET 12 OF 47 SHEETS

DESIGNED BY:
DRAWN BY: T.HAMMOND
CHECKED BY:

TELVENT CONFIDENTIAL: THIS DOCUMENT AND THE INFORMATION CONTAINED IN IT ARE CONFIDENTIAL AND CANNOT BE COPIED OR DISCLOSED IN WHOLE OR IN PART WITHOUT THE EXPRESS WRITTEN CONSENT OF TELVENT, INC.

NOTES:

1. SEGMENT 1 TOLL 49 PLANS SHEET RD–700, SOUTHBOUND RAMP STA 502+88.17, 15.00' RT
2. SEGMENT 1 TOLL 49 PLANS SHEET RD–700, SOUTHBOUND RAMP STA 502+33.17, 15.00' RT
3. CONNECTS TO THE INTERMEDIATE GB AND RAMP CONNECTION GROUND BOX ON THE NB RAMP. SEE SHEET 7/16 FOR RAMP PROXIMITIES.
4. TREADLE RISER LOCATED AT STA 502+78.75, 1.00' RT
5. TREADLE RISER LOCATED AT STA 502+77.17, 1.00' RT
6. THE AVI READER CABINET IS AFIXED TO THE GANTRY COLUMN (BY OTHERS) APPROXIMATELY 4 FEET ABOVE GROUND LEVEL. POWER AND COMMS CONDUITS ARE TAPPED FROM THE COLUMN CONDUITS (BY OTHERS). THE CABINET SHALL BE PLACED SO THAT PERSONNEL ACCESSING IT WILL HAVE THE COLUMN BETWEEN THEM AND ONCOMING TRAFFIC.

SOUTHBOUND RAMP CONDUIT DESIGNATIONS					
RUN #	Conduit ID	QTY 2"	QTY 3"	QTY 4"	Description
15	EA	--	1	--	RAW POWER FROM NB RAMP - BY OTHERS
16	EB	--	1	--	FIBER COMMS BETWEEN RAMPS
17	EC	1	--	--	RAW POWER FROM NB RAMP - BY OTHERS
18	ED	1	--	--	FIBER COMMS BETWEEN RAMPS
19	FA	--	--	1	CABINET POWER TO SOUTH GANTRY POWER GB
20	FB	--	--	1	SOUTH GANTRY POWER GB TO SOUTH GANTRY
21	GA	--	--	1	CABINET COMMS TO SOUTH GANTRY COMMS GB
22	GB	--	--	1	SOUTH GANTRY COMMS GB TO SOUTH GANTRY
23	DC	1	--	--	SOUTH GANTRY COMMS GB TO TREADLE RISER
24	DD	1	--	--	SOUTH GANTRY COMMS GB TO TREADLE RISER
25	FC	--	--	1	CABINET POWER TO NORTH GANTRY POWER GB
26	FD	--	--	1	NORTH GANTRY POWER GB TO NORTH GANTRY
27	GC	--	--	1	CABINET COMMS TO NORTH GANTRY COMMS GB
28	GD	--	--	1	NORTH GANTRY COMMS GB TO NORTH GANTRY

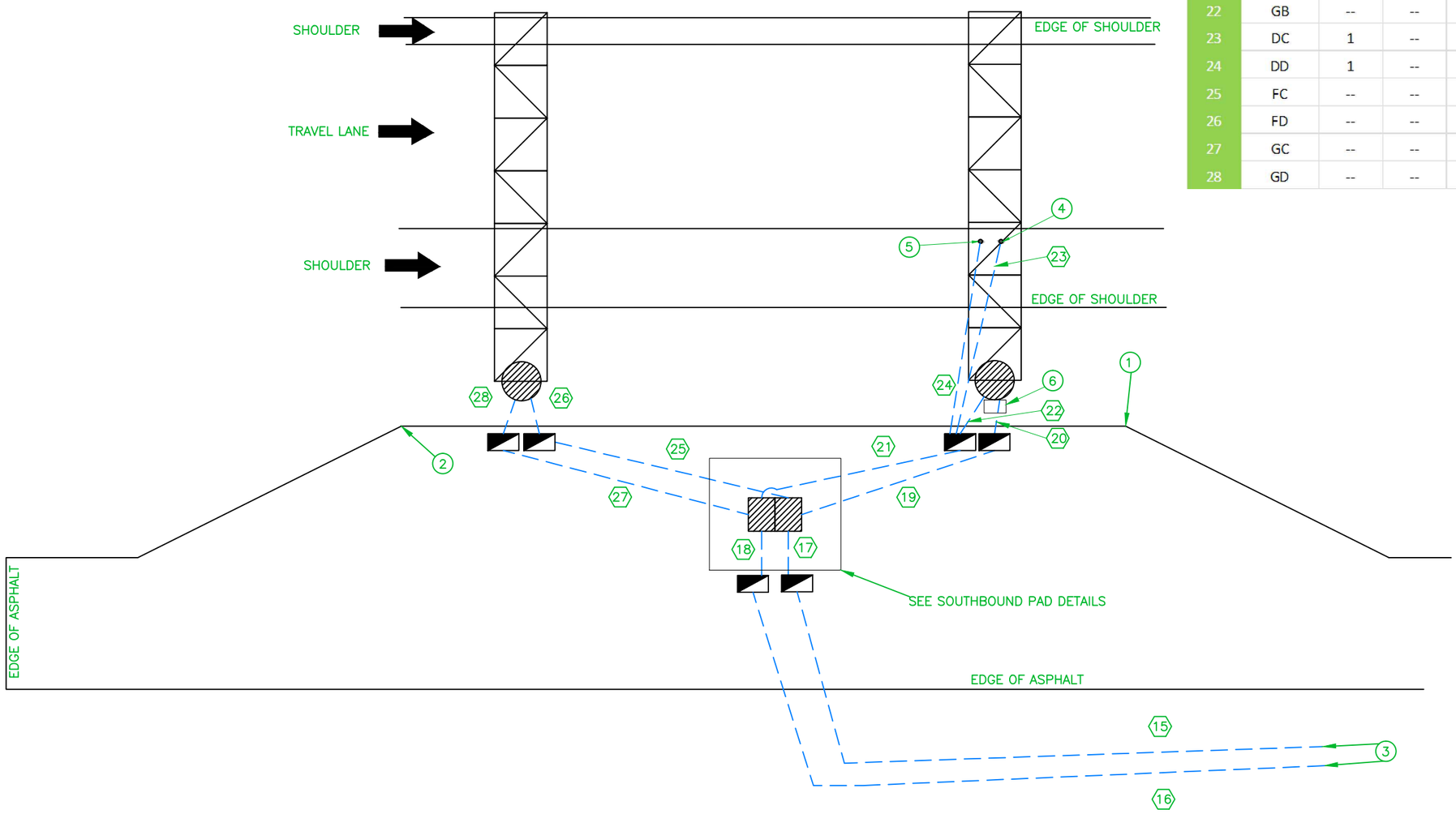

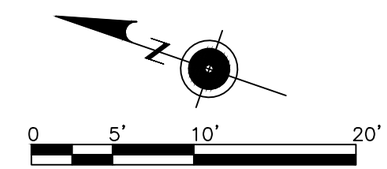

PRELIMINARY / DRAFT

FOR REVIEW ONLY. NOT FOR BUILD OR DESIGN WITHOUT APPROVAL BY AUTHORIZED REPRESENTATIVE OF TELVENT ENGINEERING.

DATE	DESCRIPTION OF REVISION	NAME

TELVENT
211 E SEVENTH STREET, SUITE 800, AUSTIN, TEXAS 78701

NET RMA
TOLL 49, SEGMENT 3B
SOUTHBOUND RAMP
ZONE LAYOUT

DATE: 5/10/2012 SHEET 13 OF 47 SHEETS

DESIGNED BY:
DRAWN BY: T.HAMMOND
CHECKED BY:

TELVENT CONFIDENTIAL: THIS DOCUMENT AND THE INFORMATION CONTAINED IN IT ARE CONFIDENTIAL AND CANNOT BE COPIED OR DISCLOSED IN WHOLE OR IN PART WITHOUT THE EXPRESS WRITTEN CONSENT OF TELVENT, INC.

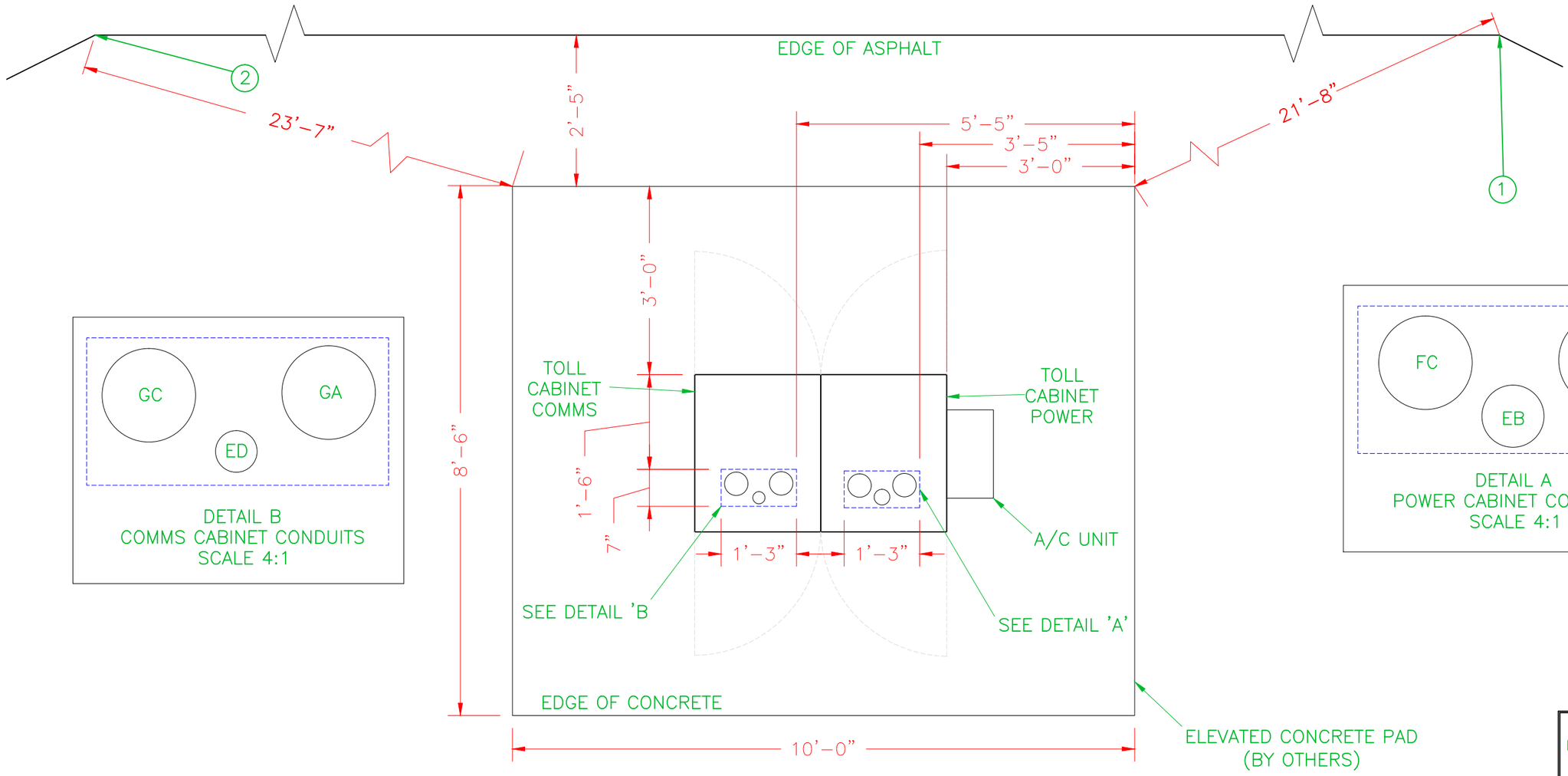

NOTES:

1. SEGMENT 1 TOLL 49 PLANS SHEET RD-700, SOUTHBOUND RAMP STA 502+88.17, 15.00' RT
2. SEGMENT 1 TOLL 49 PLANS SHEET RD-700, SOUTHBOUND RAMP STA 502+33.17, 15.00' RT
3. ALL CONDUIT STUB OUTS SHALL HAVE MINIMUM 1 INCH CLEARANCE FROM OTHER STUB OUTS. ALL CONDUIT TO BE INSTALLED PER NEC CODE.
4. ALL CONDUIT STUB OUTS SHALL EXTEND 6-10 INCHES ABOVE FINISHED SURFACE.
5. CONDUITS WITHIN A DEFINED ZONE MUST FALL WITHIN THAT ZONE FOR THEIR FULL HEIGHT.
6. THE ELEVATED CONCRETE PAD SHALL EXTEND NO LESS THAN THREE FEET FROM EACH SIDE OF THE TOLLING CABINET.
7. SEE SB RAMP ZONE LAYOUT FOR ADDITIONAL CONDUIT DETAILS.

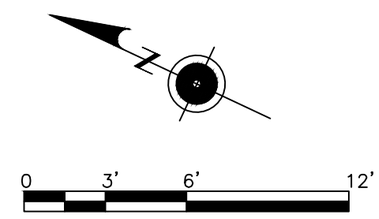

PRELIMINARY / DRAFT

FOR REVIEW ONLY. NOT FOR BUILD OR DESIGN WITHOUT APPROVAL BY AUTHORIZED REPRESENTATIVE OF TELVENT ENGINEERING.

DATE	DESCRIPTION OF REVISION	NAME

TELVENT
211 E SEVENTH STREET, SUITE 800, AUSTIN, TEXAS 78701

NET RMA

TOLL 49, SEGMENT 3B
SOUTHBOUND RAMP
PAD LAYOUT

DATE: 5/10/2012 SHEET 14 OF 47 SHEETS

DESIGNED BY:
DRAWN BY: T. HAMMOND
CHECKED BY:

TELVENT CONFIDENTIAL: THIS DOCUMENT AND THE INFORMATION CONTAINED IN IT ARE CONFIDENTIAL AND CANNOT BE COPIED OR DISCLOSED IN WHOLE OR IN PART WITHOUT THE EXPRESS WRITTEN CONSENT OF **TELVENT, INC.**

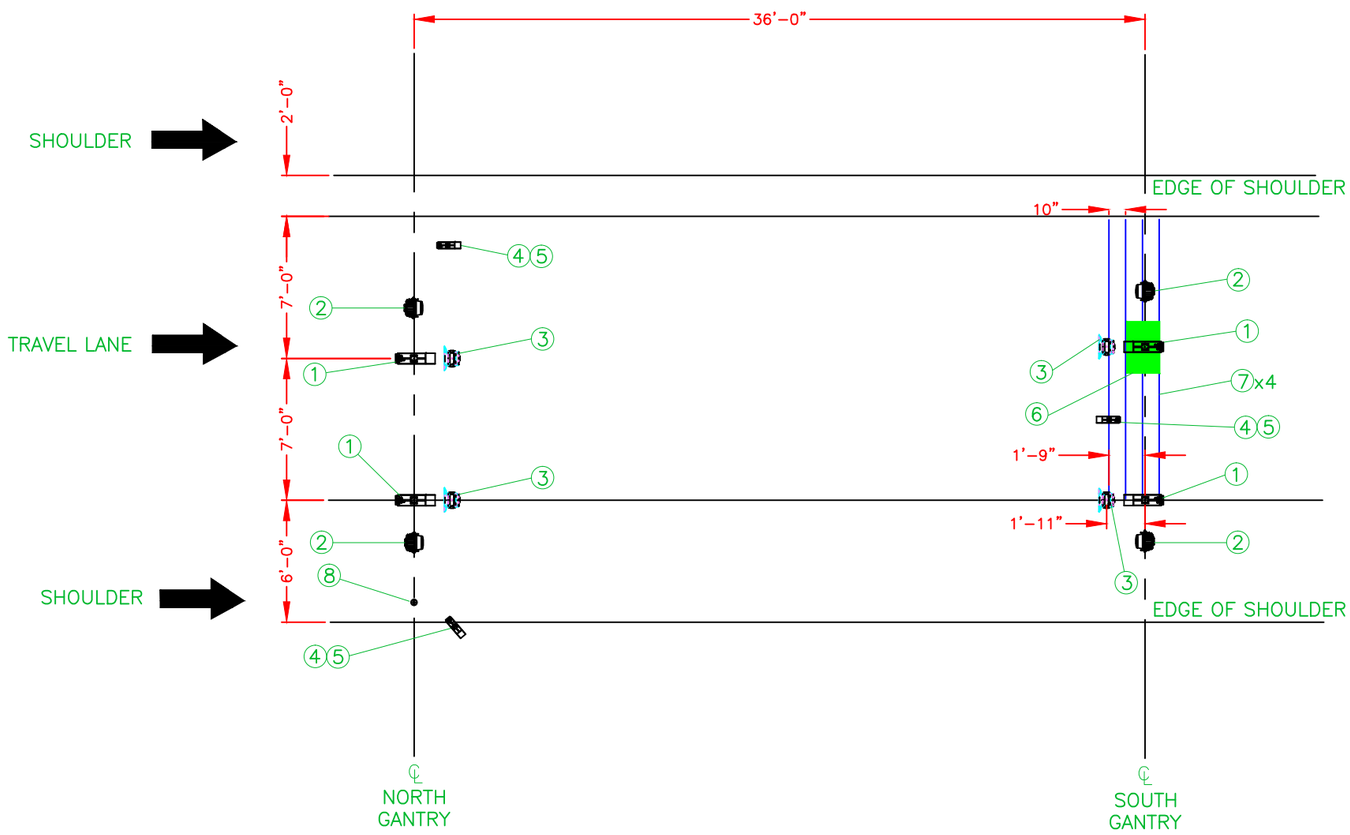

NOTES:

1. SHOULDER SICK SCANNERS AND LICENSE PLATE VES CAMERAS MOUNTED OVER THE LANE/SHOULDER DIVIDING STRIPE.
2. TRAVEL LANE SICK SCANNERS AND LICENSE PLATE VES CAMERAS MOUNTED OVER THE LANE CENTERLINE.
3. SEE CRITICAL DIMENSION DIAGRAM FOR DETAILED DIMENSIONS OF EQUIPMENT LOCATION RELATIVE TO LICENSE PLATE IMAGE CAPTURE TRIGGER POINT.

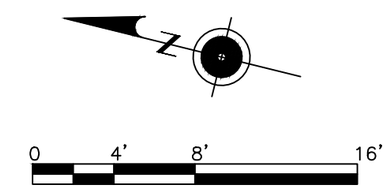

ITEM NO.	QTY REQ'D	PART NUMBER	NOMENCLATURE OR DESCRIPTION	MANUFACTURER
8	1	31014203	TLS-300, Dynamic Traffic Light Sensor with mounting plate and 12VDC/25W DC heaters.	JAI
7	4	SPZ-400-1-50	SPZ FO SENSOR, 4.0M w/ 50 Meters Passive Cable, with Connectors	MSI
6	1	12-3152-002	AA3152 UTA ANTENNA WITH CHECK TAG	TRANSCORE
5	3	AT-15	SUPPLEMENTAL IR LIGHTING, 850NM	AXTON
4	3	BIP2-1300C-DN	1.3 MEGAPIXEL (1280x960), IP CAMERA, DAY/NIGHT	BASLER
3	4	LMS511-10100 PRO	SICK SCANNER	SICK
2	4	31015343	TNF-31, TRAFFIC NIGHT FLASH WITH 6FT CABLE, POWER SUPPLY INSIDE ENCLOSURE.	JAI
1	4	31015330	VIS 500 CAMERA ASSEMBLY	JAI

PRELIMINARY / DRAFT

FOR REVIEW ONLY. NOT FOR BUILD OR DESIGN WITHOUT APPROVAL BY AUTHORIZED REPRESENTATIVE OF TELVENT ENGINEERING.

DATE	DESCRIPTION OF REVISION	NAME

TELVENT
211 E SEVENTH STREET, SUITE 800, AUSTIN, TEXAS 78701

NET RMA
TOLL 49, SEGMENT 3B
SOUTHBOUND RAMP
PLAN VIEW

DATE: 5/10/2012 SHEET 15 OF 47 SHEETS

DESIGNED BY:
DRAWN BY: T.HAMMOND
CHECKED BY:

TELVENT CONFIDENTIAL: THIS DOCUMENT AND THE INFORMATION CONTAINED IN IT ARE CONFIDENTIAL AND CANNOT BE COPIED OR DISCLOSED IN WHOLE OR IN PART WITHOUT THE EXPRESS WRITTEN CONSENT OF TELVENT, INC.

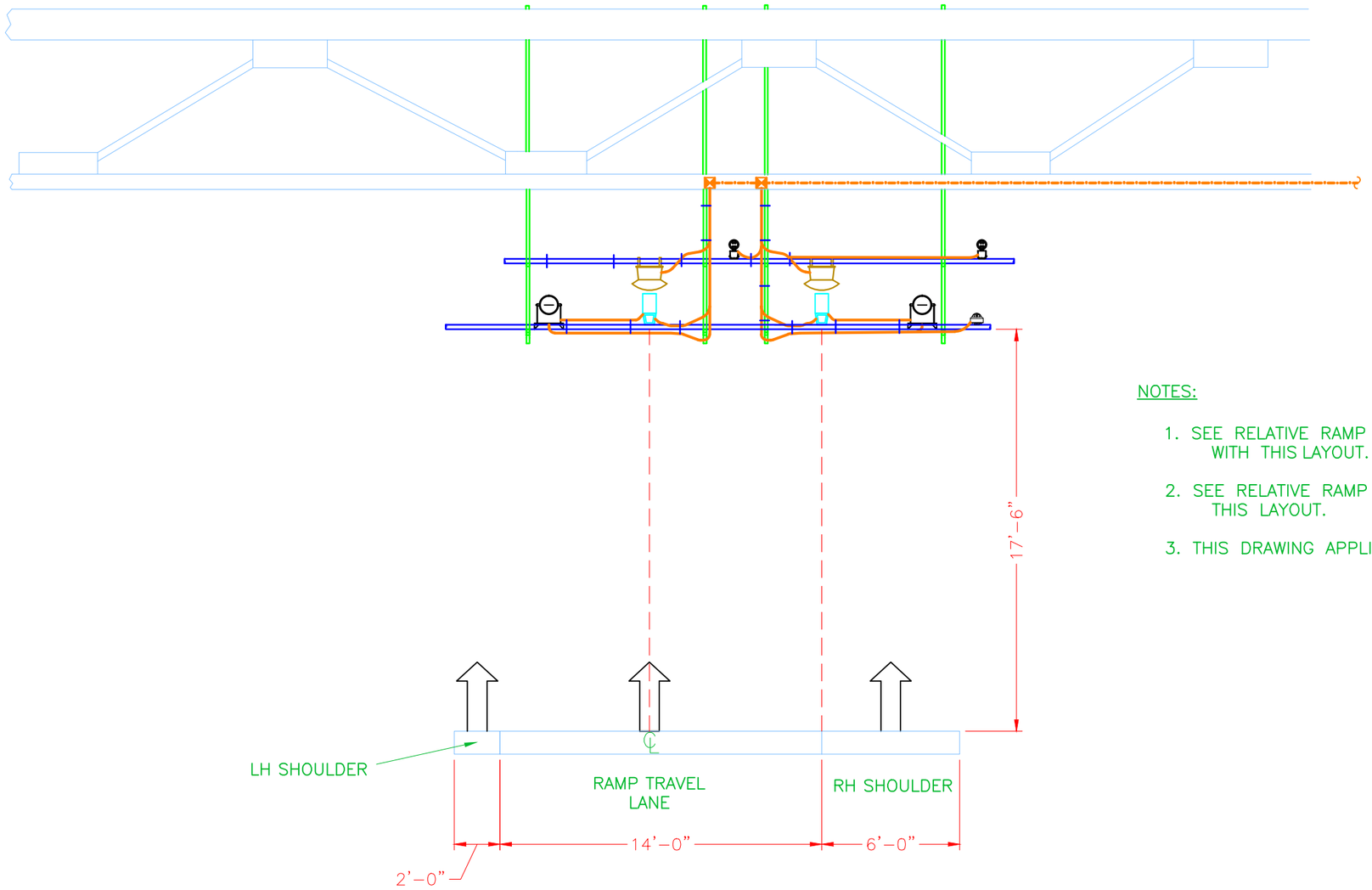

ELEVATION
RAMP
ENTRY GANTRY

NOTES:

1. SEE RELATIVE RAMP ZONE LAYOUT SHEET FOR CONDUIT RUNS ASSOCIATED WITH THIS LAYOUT.
2. SEE RELATIVE RAMP CABLE SCHEDULE SHEET FOR CABLING ASSOCIATED WITH THIS LAYOUT.
3. THIS DRAWING APPLIES TO BOTH THE NORTHBOUND AND SOUTHBOUND RAMPS.

0 3' 6' 12'

PRELIMINARY / DRAFT

FOR REVIEW ONLY. NOT FOR BUILD OR DESIGN WITHOUT APPROVAL BY AUTHORIZED REPRESENTATIVE OF TELVENT ENGINEERING.

DATE	DESCRIPTION OF REVISION	NAME

TELVENT
211 E SEVENTH STREET, SUITE 800, AUSTIN, TEXAS 78701

NET RMA
TOLL 49, SEGMENT 3B
RAMP
RISER DETAIL ENTRY GANTRY

DATE: 5/10/2012 SHEET 16 OF 47 SHEETS

DESIGNED BY:
DRAWN BY: T. HAMMOND
CHECKED BY:

TELVENT CONFIDENTIAL: THIS DOCUMENT AND THE INFORMATION CONTAINED IN IT ARE CONFIDENTIAL AND CANNOT BE COPIED OR DISCLOSED IN WHOLE OR IN PART WITHOUT THE EXPRESS WRITTEN CONSENT OF **TELVENT, INC.**

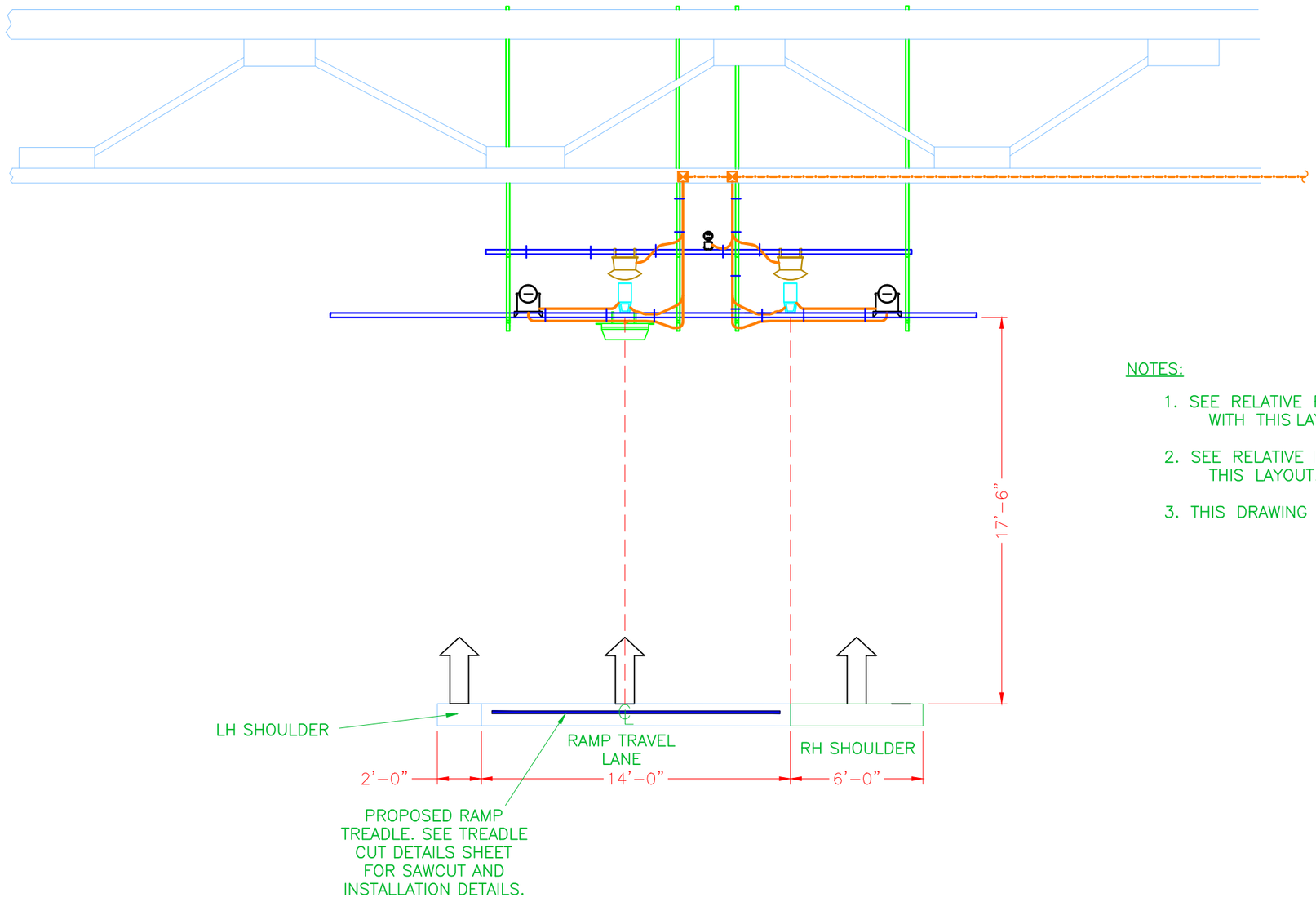

ELEVATION
RAMP
EXIT GANTRY

NOTES:

1. SEE RELATIVE RAMP ZONE LAYOUT SHEET FOR CONDUIT RUNS ASSOCIATED WITH THIS LAYOUT.
2. SEE RELATIVE RAMP CABLE SCHEDULE SHEET FOR CABLING ASSOCIATED WITH THIS LAYOUT.
3. THIS DRAWING APPLIES TO BOTH THE NORTHBOUND AND SOUTHBOUND RAMPS.

0 3' 6' 12'

PRELIMINARY / DRAFT

FOR REVIEW ONLY. NOT FOR BUILD OR DESIGN WITHOUT APPROVAL BY AUTHORIZED REPRESENTATIVE OF TELVENT ENGINEERING.

DATE	DESCRIPTION OF REVISION	NAME

TELVENT
211 E SEVENTH STREET, SUITE 800, AUSTIN, TEXAS 78701

NET RMA
TOLL 49, SEGMENT 3B
RAMP
RISER DETAIL EXIT GANTRY

DATE: 5/10/2012 SHEET 17 OF 47 SHEETS

DESIGNED BY:
DRAWN BY: T. HAMMOND
CHECKED BY:

TELVENT CONFIDENTIAL: THIS DOCUMENT AND THE INFORMATION CONTAINED IN IT ARE CONFIDENTIAL AND CANNOT BE COPIED OR DISCLOSED IN WHOLE OR IN PART WITHOUT THE EXPRESS WRITTEN CONSENT OF TELVENT, INC.

NETRMA TOLL 49 SEGMENT 3B NB & SB RAMPS CABLE SCHEDULE

Cable ID	Conduit ID(s)	Run Description	Cable Mfr	Cable Model	Cable Description	Cable Diameter	Cable Area	Run Source	Connection	Run Destination	Connection	Length (feet) Southbound Ramp Shld 2	Southbound Ramp 2	Northbound Ramp 1	Northbound Ramp Shld 1
1	AA	Incoming Power	--	--	--	0	0.000	Main Disc. Switch	--	Incoming Power GB	--	--	--	--	--
2	AC	Incoming Network	--	--	--	0	0.000	External Network	--	Incoming Comms GB	--	--	--	--	--
3	AB	Incoming Power	--	--	--	0	0.000	Incoming Power GB	--	Toll Cabinet	--	--	--	--	--
4	AD	Incoming Network	--	--	--	0	0.000	Incoming Comms GB	--	Toll Cabinet	--	--	--	--	--
5	EA	Ramp to Ramp Power	--	--	--	0	0.000	NB Ramp Cabinet	--	SB Ramp Cabinet	--	--	--	--	--
6	EB	Ramp to Ramp Comms	Field Components	FCW10F1106NF	6-Strand Multi-mode Fiber	0.200	0.031	NB Ramp Cabinet	SC	SB Ramp Cabinet	SC				
7	CA, DA	NB Ramp Treadle 1	MSI	4-1005798-4	Duplex Fiber Feeder Cable	0.200	0.031	Toll Cabinet	SMA-905	NB Ramp Treadle Riser 1	Field Splice			90	
8	CA, DB	NB Ramp Treadle 2	MSI	4-1005798-4	Duplex Fiber Feeder Cable	0.200	0.031	Toll Cabinet	SMA-905	NB Ramp Treadle Riser 2	Field Splice			90	
9	GA, DC	SB Ramp Treadle 1	MSI	4-1005798-4	Duplex Fiber Feeder Cable	0.200	0.031	Toll Cabinet	SMA-905	SB Ramp Treadle Riser 1	Field Splice		65		
10	GA, DD	SB Ramp Treadle 2	MSI	4-1005798-4	Duplex Fiber Feeder Cable	0.200	0.031	Toll Cabinet	SMA-905	SB Ramp Treadle Riser 2	Field Splice		65		
11	CA, CB	NB Ramp DVAS Comms Entry	Superior Essex	04-001-64	Burial Rated Cat 6	0.400	0.126	Toll Cabinet	RJ45	North Gantry NB Ramp Lane	RJ45			130	
12	CC, CD	NB Ramp DVAS Comms Exit	Superior Essex	04-001-64	Burial Rated Cat 6	0.400	0.126	Toll Cabinet	RJ45	South Gantry NB Ramp Lane	RJ45			130	
13	CC, CD	NB Pad DVAS Comms	Superior Essex	04-001-64	Burial Rated Cat 6	0.400	0.126	Toll Cabinet	RJ45	South Gantry NB Ramp Shld	RJ45				115
14	GA, GB	SB Ramp DVAS Comms Entry	Superior Essex	04-001-64	Burial Rated Cat 6	0.400	0.126	Toll Cabinet	RJ45	South Gantry SB Ramp Lane	RJ45		105		
15	GC, GD	SB Ramp DVAS Comms Exit	Superior Essex	04-001-64	Burial Rated Cat 6	0.400	0.126	Toll Cabinet	RJ45	North Gantry SB Ramp Lane	RJ45		105		
16	GC, GD	SB Pad DVAS Comms	Superior Essex	04-001-64	Burial Rated Cat 6	0.400	0.126	Toll Cabinet	RJ45	North Gantry SB Ramp Shld	RJ45	90			
17	BA, BB	NB Ramp DVAS Power Entry	Belden	7993A	18 AWG, 4 Conductor	0.218	0.037	Toll Cabinet	Terminal	North Gantry NB Ramp Lane	Field Splice			130	
18	BC, BD	NB Ramp DVAS Power Exit	Belden	7993A	18 AWG, 4 Conductor	0.218	0.037	Toll Cabinet	Terminal	South Gantry NB Ramp Lane	Field Splice			130	
19	BC, BD	NB Pad DVAS Power	Belden	7993A	18 AWG, 4 Conductor	0.218	0.037	Toll Cabinet	Terminal	South Gantry NB Ramp Shld	Field Splice				115
20	FA, FB	SB Ramp DVAS Power Entry	Belden	7993A	18 AWG, 4 Conductor	0.218	0.037	Toll Cabinet	Terminal	South Gantry SB Ramp Lane	Field Splice		105		
21	FC, FD	SB Ramp DVAS Power Exit	Belden	7993A	18 AWG, 4 Conductor	0.218	0.037	Toll Cabinet	Terminal	North Gantry SB Ramp Lane	Field Splice		105		
22	FC, FD	SB Pad DVAS Power	Belden	7993A	18 AWG, 4 Conductor	0.218	0.037	Toll Cabinet	Terminal	North Gantry SB Ramp Shld	Field Splice	90			
23	CC, CD	NB Ramp Light Sensor Comm	Superior Essex	04-001-64	Burial Rated Cat 6	0.400	0.126	Toll Cabinet	RJ45	South Gantry NB Ramp Shld	Field Splice				115
24	BC, BD	NB Ramp Light Sensor Power	Belden	7993A	18 AWG, 4 Conductor	0.218	0.037	Toll Cabinet	Terminal	South Gantry NB Ramp Shld	Field Splice				115
25	GC, GD	SB Ramp Light Sensor Comm	Superior Essex	04-001-64	Burial Rated Cat 6	0.400	0.126	Toll Cabinet	RJ45	North Gantry SB Ramp Shld	Field Splice	90			
26	FC, FD	SB Ramp Light Sensor Power	Belden	7993A	18 AWG, 4 Conductor	0.218	0.037	Toll Cabinet	Terminal	North Gantry SB Ramp Shld	Field Splice	90			
27	CA, CB	NB Ramp Shoulder Entry VES Camera Comm	Superior Essex	04-001-64	Burial Rated Cat 6	0.400	0.126	Toll Cabinet	RJ45	North Gantry NB Ramp Shld	Field Splice				115
28	CC, CD	NB Ramp Shoulder Exit VES Camera Comm	Superior Essex	04-001-64	Burial Rated Cat 6	0.400	0.126	Toll Cabinet	RJ45	South Gantry NB Ramp Shld	Field Splice				115
29	CA, CB	NB Ramp Lane Entry VES Camera Comm	Superior Essex	04-001-64	Burial Rated Cat 6	0.400	0.126	Toll Cabinet	RJ45	North Gantry NB Ramp Lane	Field Splice			130	
30	CC, CD	NB Ramp Lane Exit VES Camera Comm	Superior Essex	04-001-64	Burial Rated Cat 6	0.400	0.126	Toll Cabinet	RJ45	South Gantry NB Ramp Lane	Field Splice			130	
31	GA, GB	SB Ramp Shoulder Entry VES Camera Comm	Superior Essex	04-001-64	Burial Rated Cat 6	0.400	0.126	Toll Cabinet	RJ45	South Gantry SB Ramp Shld	Field Splice	90			
32	GC, GD	SB Ramp Shoulder Exit VES Camera Comm	Superior Essex	04-001-64	Burial Rated Cat 6	0.400	0.126	Toll Cabinet	RJ45	North Gantry SB Ramp Shld	Field Splice	90			
33	GA, GB	SB Ramp Lane Entry VES Camera Comm	Superior Essex	04-001-64	Burial Rated Cat 6	0.400	0.126	Toll Cabinet	RJ45	South Gantry SB Ramp Lane	Field Splice		105		
34	GC, GD	SB Ramp Lane Exit VES Camera Comm	Superior Essex	04-001-64	Burial Rated Cat 6	0.400	0.126	Toll Cabinet	RJ45	North Gantry SB Ramp Lane	Field Splice		105		
35	BA, BB	NB Ramp Shoulder Entry VES Camera Power	Belden	7993A	18 AWG, 4 Conductor	0.218	0.037	Toll Cabinet	Terminal	North Gantry NB Ramp Shld	Field Splice				115
36	BC, BD	NB Ramp Shoulder Exit VES Camera Power	Belden	7993A	18 AWG, 4 Conductor	0.218	0.037	Toll Cabinet	Terminal	South Gantry NB Ramp Shld	Field Splice				115
37	BA, BB	NB Ramp Lane Entry VES Camera Power	Belden	7993A	18 AWG, 4 Conductor	0.218	0.037	Toll Cabinet	Terminal	North Gantry NB Ramp Lane	Field Splice			130	
38	BC, BD	NB Ramp Lane Exit VES Camera Power	Belden	7993A	18 AWG, 4 Conductor	0.218	0.037	Toll Cabinet	Terminal	South Gantry NB Ramp Lane	Field Splice			130	
39	FA, FB	SB Ramp Shoulder Entry VES Camera Power	Belden	7993A	18 AWG, 4 Conductor	0.218	0.037	Toll Cabinet	Terminal	South Gantry SB Ramp Shld	Field Splice	90			
40	FC, FD	SB Ramp Shoulder Exit VES Camera Power	Belden	7993A	18 AWG, 4 Conductor	0.218	0.037	Toll Cabinet	Terminal	North Gantry SB Ramp Shld	Field Splice	90			
41	FA, FB	SB Ramp Lane Entry VES Camera Power	Belden	7993A	18 AWG, 4 Conductor	0.218	0.037	Toll Cabinet	Terminal	South Gantry SB Ramp Lane	Field Splice		105		
42	FC, FD	SB Ramp Lane Exit VES Camera Power	Belden	7993A	18 AWG, 4 Conductor	0.218	0.037	Toll Cabinet	Terminal	North Gantry SB Ramp Lane	Field Splice		105		
43	BA, BB	NB Ramp Shoulder Entry VES Strobe Power	Belden	7993A	18 AWG, 4 Conductor	0.218	0.037	Toll Cabinet	Terminal	North Gantry NB Ramp Shld	Field Splice				115
44	BC, BD	NB Ramp Shoulder Exit VES Strobe Power	Belden	7993A	18 AWG, 4 Conductor	0.218	0.037	Toll Cabinet	Terminal	South Gantry NB Ramp Shld	Field Splice				115
45	BA, BB	NB Ramp Lane Entry VES Strobe Power	Belden	7993A	18 AWG, 4 Conductor	0.218	0.037	Toll Cabinet	Terminal	North Gantry NB Ramp Lane	Field Splice			130	
46	BC, BD	NB Ramp Lane Exit VES Strobe Power	Belden	7993A	18 AWG, 4 Conductor	0.218	0.037	Toll Cabinet	Terminal	South Gantry NB Ramp Lane	Field Splice			130	
47	FA, FB	SB Ramp Shoulder Entry VES Strobe Power	Belden	7993A	18 AWG, 4 Conductor	0.218	0.037	Toll Cabinet	Terminal	South Gantry SB Ramp Shld	Field Splice	90			
48	FC, FD	SB Ramp Shoulder Exit VES Strobe Power	Belden	7993A	18 AWG, 4 Conductor	0.218	0.037	Toll Cabinet	Terminal	North Gantry SB Ramp Shld	Field Splice	90			
49	FA, FB	SB Ramp Lane Entry VES Strobe Power	Belden	7993A	18 AWG, 4 Conductor	0.218	0.037	Toll Cabinet	Terminal	South Gantry SB Ramp Lane	Field Splice		105		
50	FC, FD	SB Ramp Lane Exit VES Strobe Power	Belden	7993A	18 AWG, 4 Conductor	0.218	0.037	Toll Cabinet	Terminal	North Gantry SB Ramp Lane	Field Splice		105		
51	CC, CD	NB Ramp Shoulder Entry Scanner Comm	Superior Essex	04-001-64	Burial Rated Cat 6	0.400	0.126	Toll Cabinet	RJ45	South Gantry NB Ramp Shld	Field Splice				115
52	CA, CB	NB Ramp Shoulder Exit Scanner Comm	Superior Essex	04-001-64	Burial Rated Cat 6	0.400	0.126	Toll Cabinet	RJ45	North Gantry NB Ramp Shld	Field Splice				115
53	CC, CD	NB Ramp Lane Entry Scanner Comm	Superior Essex	04-001-64	Burial Rated Cat 6	0.400	0.126	Toll Cabinet	RJ45	South Gantry NB Ramp Lane	Field Splice			130	
54	CA, CB	NB Ramp Lane Exit Scanner Comm	Superior Essex	04-001-64	Burial Rated Cat 6	0.400	0.126	Toll Cabinet	RJ45	North Gantry NB Ramp Lane	Field Splice			130	
55	GC, GD	SB Ramp Shoulder Entry Scanner Comm	Superior Essex	04-001-64	Burial Rated Cat 6	0.400	0.126	Toll Cabinet	RJ45	North Gantry SB Ramp Shld	Field Splice	90			
56	GA, GB	SB Ramp Shoulder Exit Scanner Comm	Superior Essex	04-001-64	Burial Rated Cat 6	0.400	0.126	Toll Cabinet	RJ45	South Gantry SB Ramp Shld	Field Splice	90			
57	GC, GD	SB Ramp Lane Entry Scanner Comm	Superior Essex	04-001-64	Burial Rated Cat 6	0.400	0.126	Toll Cabinet	RJ45	North Gantry SB Ramp Lane	Field Splice		105		
58	GA, GB	SB Ramp Lane Exit Scanner Comm	Superior Essex	04-001-64	Burial Rated Cat 6	0.218	0.037	Toll Cabinet	RJ45	South Gantry SB Ramp Lane	Field Splice		105		
59	BC, BD	NB Ramp Shoulder Entry Scanner Power	Belden	7993A	18 AWG, 4 Conductor	0.218	0.037	Toll Cabinet	Terminal	South Gantry NB Ramp Shld	Field Splice				115
60	BA, BB	NB Ramp Shoulder Exit Scanner Power	Belden	7993A	18 AWG, 4 Conductor	0.218	0.037	Toll Cabinet	Terminal	North Gantry NB Ramp Shld	Field Splice				115
61	BC, BD	NB Ramp Lane Entry Scanner Power	Belden	7993A	18 AWG, 4 Conductor	0.218	0.037	Toll Cabinet	Terminal	South Gantry NB Ramp Lane	Field Splice			130	
62	BA, BB	NB Ramp Lane Exit Scanner Power	Belden	7993A	18 AWG, 4 Conductor	0.218	0.037	Toll Cabinet	Terminal	North Gantry NB Ramp Lane	Field Splice			130	
63	FC, FD	SB Ramp Shoulder Entry Scanner Power	Belden	7993A	18 AWG, 4 Conductor	0.218	0.037	Toll Cabinet	Terminal	North Gantry SB Ramp Shld	Field Splice	90			
64	FA, FB	SB Ramp Shoulder Exit Scanner Power	Belden	7993A	18 AWG, 4 Conductor	0.218	0.037	Toll Cabinet	Terminal	South Gantry SB Ramp Shld	Field Splice	90			
65	FC, FD	SB Ramp Lane Entry Scanner Power	Belden	7993A	18 AWG, 4 Conductor	0.218	0.037	Toll Cabinet	Terminal	North Gantry SB Ramp Lane	Field Splice		105		
66	FA, FB	SB Ramp Lane Exit Scanner Power	Belden	7993A	18 AWG, 4 Conductor	0.218	0.037	Toll Cabinet	Terminal	South Gantry SB Ramp Lane	Field Splice		105		
67	CB	NB Ramp AVI Antenna	Times Microwave	LMR-600	Low Loss Coax Cable	0.59	0.273	NB Ramp AVI Cabinet	N-Type Male	NB Ramp AVI Antenna	N-Type Male			60	
68	CA	NB Ramp AVI Reader Comm	Superior Essex	04-001-64	Burial Rated Cat 6	0.218	0.037	Toll Cabinet	RJ45	NB Ramp AVI Cabinet	Field Splice			80	
69	BA	NB Ramp AVI Reader Power	Belden	7993A	18 AWG, 4 Conductor	0.218	0.037	Toll Cabinet	Terminal	NB Ramp AVI Cabinet	Field Splice			80	
70	GD	SB Ramp AVI Antenna	Times Microwave	LMR-600	Low Loss Coax Cable	0.59	0.273	SB Ramp AVI Cabinet	N-Type Male	SB Ramp AVI Antenna	N-Type Male		60		
71	GC	SB Ramp AVI Reader Comm	Superior Essex	04-001-64	Burial Rated Cat 6	0.218	0.037	Toll Cabinet	RJ45	SB Ramp AVI Cabinet	Field Splice		55		
72	FA	SB Ramp AVI Reader Power	Belden	7993A	18 AWG, 4 Conductor	0.218	0.037	Toll Cabinet	Terminal	SB Ramp AVI Cabinet	Field Splice		55		

Cable Manufacturer	Cable Part Number	Cable Description	Total Length (feet)
Belden	7993A	18 AWG, 4 Conductor	3520
Times Microware	LMR-600	Low Loss Coax Cable	60
Superior Essex	04-001-64	Burial Rated Cat 6	2720
MSI	4-1005798-4	Duplex Fiber Feeder Cable	310
Field Components	FCW10F1106NH	6-Strand Multi-mode Fiber	0

Conduit Summary

Conduit ID	AA	AB	AC	AD	BA	BB	BC	BD	CA	CB	CC	CD	DA	DB	DC	DD	EA	EB	EC	ED	FA	FB	FC	FD	GA	GB	GC	GD
Description	NB Ramp incoming power	NB Ramp incoming power	NB Ramp incoming comms	NB Ramp incoming comms	NB Ramp cabinet power to north gantry power GB	NB Ramp north gantry power GB to north gantry	NB Ramp cabinet power to south gantry power GB	NB Ramp south gantry power GB to south gantry	NB Ramp cabinet comms to north gantry comm GB	NB Ramp north gantry comm GB to north gantry	NB Ramp cabinet comms to south gantry comm GB	NB Ramp south gantry comm GB to south gantry	NB Ramp north gantry comm GB to Treadle riser #1	NB Ramp north gantry comm GB to Treadle riser #2	SB Ramp south gantry comm GB to Treadle riser #1	SB Ramp south gantry comm GB to Treadle riser #2	NB Ramp power to SB Ramp	NB Ramp comm to SB Ramp	North Gantry Power GB to Reader Pad	North Gantry Comms GB to Reader pad	SB Ramp cabinet power to south gantry power GB	SB Ramp south gantry power GB to south gantry	SB Ramp cabinet power to north gantry power GB	SB Ramp north gantry power GB to north gantry	SB Ramp cabinet comm to south gantry comm GB	SB Ramp south gantry comm GB to south gantry	SB Ramp cabinet comm to north gantry comm GB	SB Ramp north gantry comm GB to north gantry
Cable Count	1	1	1	1	5	5	7	7	7	5	7	7	1	1	1	1	1	1	0	0	5	5	7	7	6	4	7	7
Total Cable Area (sq.in.)	0.000	0.000	0.000	0.000	0.187	0.187	0.261	0.261	0.691	0.628	0.880	0.880	0.031	0.031	0.031	0.031	0.000	0.031	0.000	0.000	0.187	0.187	0.261	0.261	0.565	0.503	0.880	0.880
Conduit Quantity	1	1	1	1	1	1	1	1	1	1	1	1	1	1	1	1	1	1	1	1	1	1	1	1	1	1	1	1
Conduit Diameter (In.)	3	3	2	2	4	4	4	4	4	4	4	4	2	2	2	2	3	2	3	2	4	4	4	4	4	4	4	4
Allowable Fill (%)	40%	40%	40%	40%	40%	40%	40%	40%	40%	40%	40%	40%	40%	40%	40%	40%	40%	40%	40%	40%	40%	40%	40%	40%	40%	40%	40%	40%
Actual Fill (%)	0.0%	0.0%	0.0%	0.0%	4.7%	4.7%	6.5%	6.5%	17.3%	15.7%	22.0%	22.0%	1.6%	1.6%	1.6%	1.6%	0.0%	1.6%	0.0%	0.0%	4.7%	4.7%	6.5%	6.5%	14.1%	12.6%	22.0%	22.0%

PRELIMINARY / DRAFT

FOR REVIEW ONLY. NOT FOR BUILD OR DESIGN WITHOUT APPROVAL BY AUTHORIZED REPRESENTATIVE OF TELVENT ENGINEERING.

DATE	DESCRIPTION OF REVISION	NAME

TELVENT
211 E SEVENTH STREET, SUITE 800, AUSTIN, TEXAS 78701

NET RMA
TOLL 49, SEGMENT 3B
NB & SB RAMPS
CABLE SCHEDULE

DATE: 5/10/2012 SHEET 18 OF 47 SHEETS

DESIGNED BY:
DRAWN BY: T. HAMMOND
CHECKED BY:

TELVENT CONFIDENTIAL: THIS DOCUMENT AND THE INFORMATION CONTAINED IN IT ARE CONFIDENTIAL AND CANNOT BE COPIED OR DISCLOSED IN WHOLE OR IN PART WITHOUT THE EXPRESS WRITTEN CONSENT OF **TELVENT, INC.**

NOTES:

THESE DIMENSIONS ARE FOR THE MAINLANES AND RAMPS. ONLY ONE DIRECTION IS SHOWN HERE FOR CLARITY.

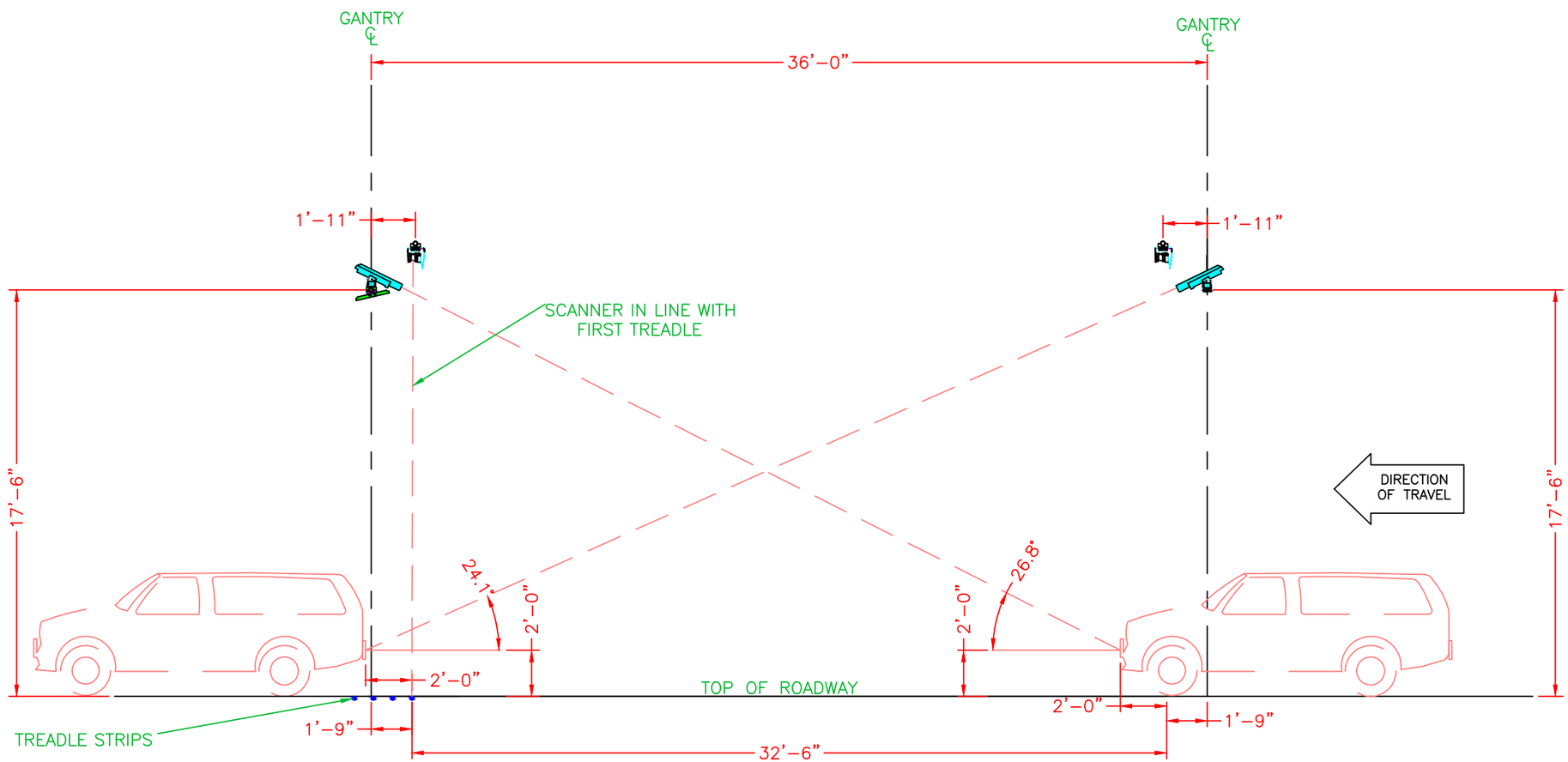

0 3' 6' 12'

PRELIMINARY / DRAFT

FOR REVIEW ONLY. NOT FOR BUILD OR DESIGN WITHOUT APPROVAL BY AUTHORIZED REPRESENTATIVE OF TELVENT ENGINEERING.

DATE	DESCRIPTION OF REVISION	NAME

TELVENT
211 E SEVENTH STREET, SUITE 800, AUSTIN, TEXAS 78701

NET RMA
TOLL 49, SEGMENT 3B
ALL LANES
CRITICAL DIMENSIONS

DATE: 5/10/2012 SHEET 19 OF 47 SHEETS

DESIGNED BY:
DRAWN BY: T. HAMMOND
CHECKED BY:

TELVENT CONFIDENTIAL: THIS DOCUMENT AND THE INFORMATION CONTAINED IN IT ARE CONFIDENTIAL AND CANNOT BE COPIED OR DISCLOSED IN WHOLE OR IN PART WITHOUT THE EXPRESS WRITTEN CONSENT OF **TELVENT, INC.**

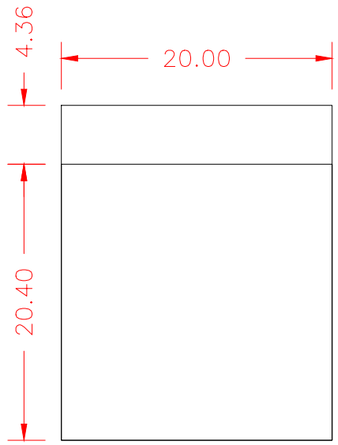

DETAIL A
CABINET FRONT VIEW

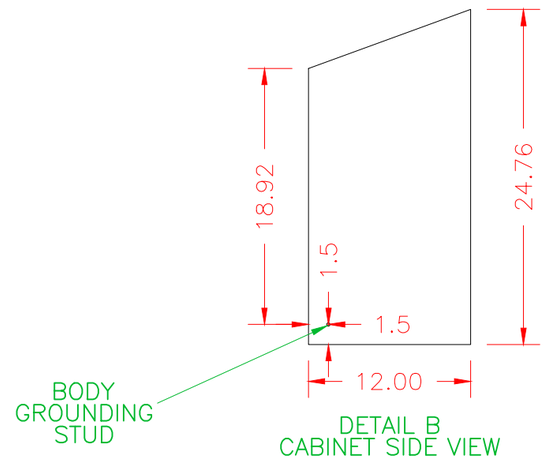

DETAIL B
CABINET SIDE VIEW

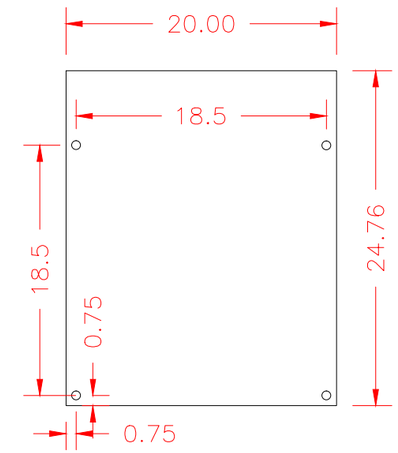

DETAIL A
CABINET REAR VIEW

AVI READER CABINET DETAILS

NOTES:

1. CABINET SHALL BE AFIXED TO THE GANTRY COLUMN (BY OTHERS)
2. CABINET SHALL BE MOUNTED APPROXIMATELY FOUR FEET ABOVE GROUND LEVEL.
3. CABINET SHALL BE MOUNTED SO THAT THE COLUMN IS BETWEEN ACCESSING PERSONNEL AND ONCOMING TRAFFIC.
4. POWER AND COMMS CONDUITS SHALL BE RUN FROM COLUMN CONDUIT INTO THE BOTTOM OF THE CABINET (BY OTHERS)
5. THE CABINET MUST BE GROUNDED AND INCLUDED IN THE LIGHTNING PROTECTION PLAN.
6. SEE APPROPRIATE ZONE LAYOUT DIAGRAM FOR CONDUIT DETAILS.

PRELIMINARY / DRAFT

FOR REVIEW ONLY. NOT FOR BUILD OR DESIGN WITHOUT APPROVAL BY AUTHORIZED REPRESENTATIVE OF TELVENT ENGINEERING.

DATE	DESCRIPTION OF REVISION	NAME

TELVENT
211 E SEVENTH STREET, SUITE 800, AUSTIN, TEXAS 78701

NET RMA
TOLL 49, SEGMENT 3B

AVI READER CABINET DETAILS

DATE: 5/10/2012 SHEET 20 OF 47 SHEETS

DESIGNED BY:
DRAWN BY: T. HAMMOND
CHECKED BY:

TELVENT CONFIDENTIAL: THIS DOCUMENT AND THE INFORMATION CONTAINED IN IT ARE CONFIDENTIAL AND CANNOT BE COPIED OR DISCLOSED IN WHOLE OR IN PART WITHOUT THE EXPRESS WRITTEN CONSENT OF **TELVENT, INC.**

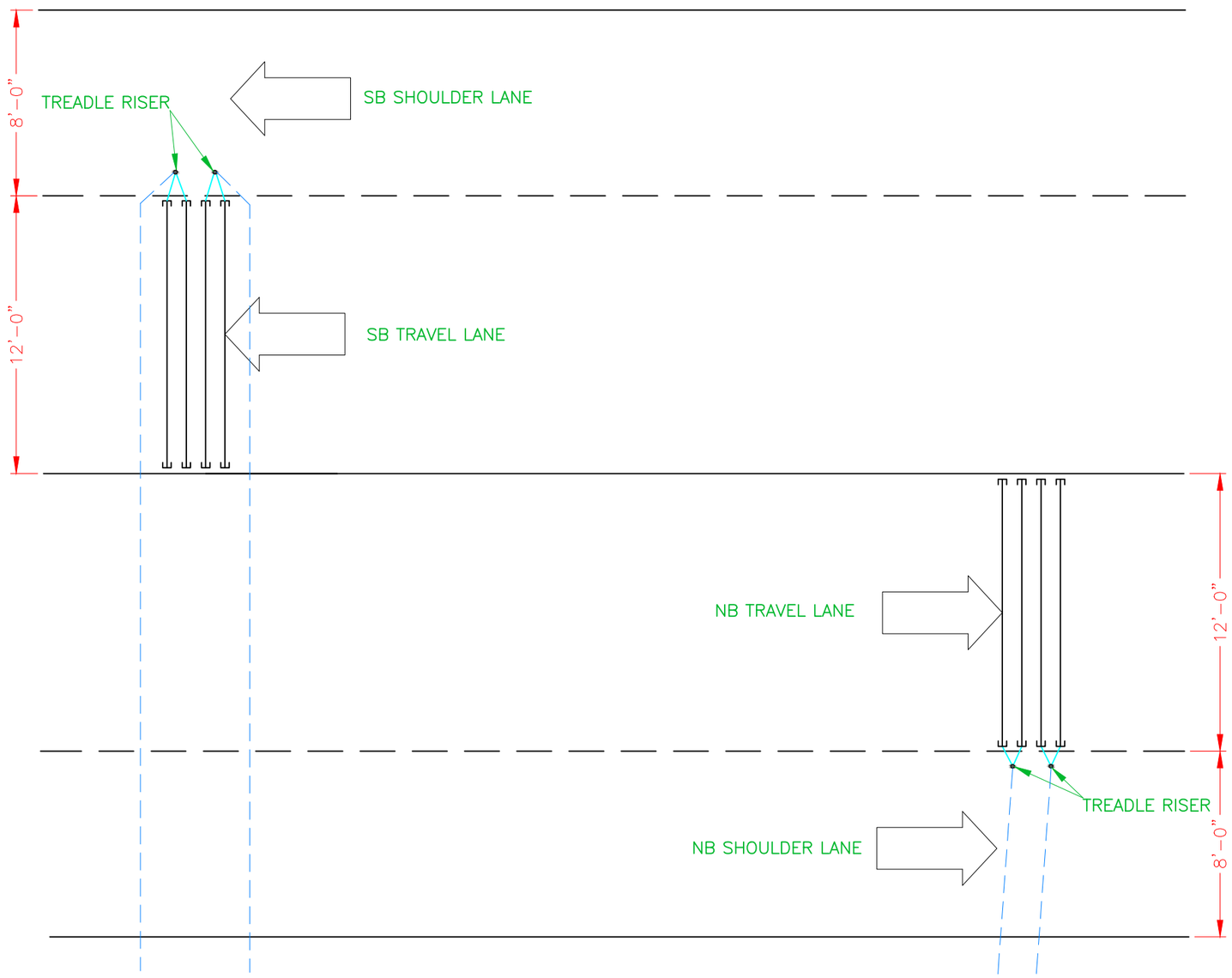

NOTES:

1. MID-POINT OF TREADLE STRIPS ALIGNED TO CENTERLINE OF TRAVEL LANE, 10" APART.
2. TREADLE STRIP SAW CUTS TO BE A MINIMUM OF 2.17" WIDE BY 1.18" DEEP AND 12'-2" IN LENGTH AS SHOWN IN DETAILS "A" AND "D-D" ON TREADLE CUT DETAILS SHEET.
3. WHEN CUTTING, OVERLAP ALL CUTS AT THE 45° CORNERS. EXTEND ALL SAW CUTS FAR ENOUGH SO THAT THEY WILL BE COMPLETED AT THEIR DEPTHS.
4. SEE MAINLANE ZONE LAYOUT SHEET FOR TREADLE RISER LOCATIONS.

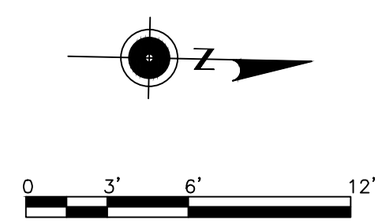

PRELIMINARY / DRAFT

FOR REVIEW ONLY. NOT FOR BUILD OR DESIGN WITHOUT APPROVAL BY AUTHORIZED REPRESENTATIVE OF TELVENT ENGINEERING.

DATE	DESCRIPTION OF REVISION	NAME

TELVENT
211 E SEVENTH STREET, SUITE 800, AUSTIN, TEXAS 78701

NET RMA
TOLL 49, SEGMENT 3B
MAINLANE
TREADLE PLAN VIEW DETAILS

DATE: 5/10/2012 SHEET 21 OF 47 SHEETS

DESIGNED BY:
DRAWN BY: T. HAMMOND
CHECKED BY:

TELVENT CONFIDENTIAL: THIS DOCUMENT AND THE INFORMATION CONTAINED IN IT ARE CONFIDENTIAL AND CANNOT BE COPIED OR DISCLOSED IN WHOLE OR IN PART WITHOUT THE EXPRESS WRITTEN CONSENT OF **TELVENT, INC.**

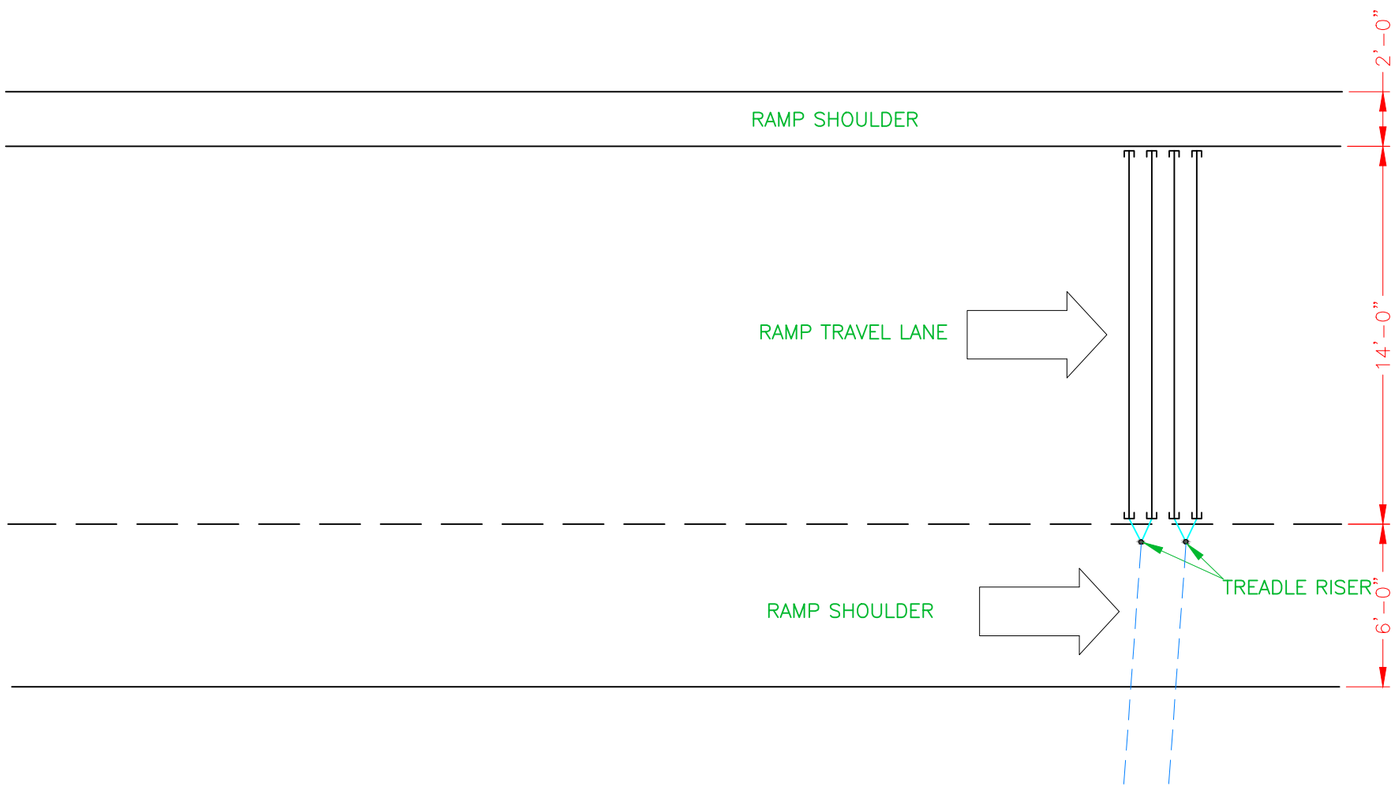

NOTES:

1. THIS DRAWING APPLIES TO BOTH THE NORTHBOUND AND SOUTHBOUND RAMPS.
2. MID-POINT OF TREADLE STRIPS ALIGNED TO CENTERLINE OF TRAVEL LANE, 10" APART.
3. TREADLE STRIP SAW CUTS TO BE A MINIMUM OF 2.17" WIDE BY 1.18" DEEP AND 13'-9" IN LENGTH AS SHOWN IN DETAILS "A" AND "D-D" ON TREADLE CUT DETAILS SHEET.
4. WHEN CUTTING, OVERLAP ALL CUTS AT THE 45° CORNERS. EXTEND ALL SAW CUTS FAR ENOUGH SO THAT THEY WILL BE COMPLETED AT THEIR DEPTHS.
5. SEE RAMP ZONE LAYOUT SHEETS FOR TREADLE RISER LOCATIONS.

PRELIMINARY / DRAFT

FOR REVIEW ONLY. NOT FOR BUILD OR DESIGN WITHOUT APPROVAL BY AUTHORIZED REPRESENTATIVE OF TELVENT ENGINEERING.

DATE	DESCRIPTION OF REVISION	NAME

TELVENT
211 E SEVENTH STREET, SUITE 800, AUSTIN, TEXAS 78701

NET RMA
TOLL 49, SEGMENT 3B
RAMP
TREADLE PLAN VIEW DETAILS

DATE: 5/10/2102 SHEET 22 OF 47 SHEETS

DESIGNED BY:
DRAWN BY: T. HAMMOND
CHECKED BY:

TELVENT CONFIDENTIAL: THIS DOCUMENT AND THE INFORMATION CONTAINED IN IT ARE CONFIDENTIAL AND CANNOT BE COPIED OR DISCLOSED IN WHOLE OR IN PART WITHOUT THE EXPRESS WRITTEN CONSENT OF **TELVENT, INC.**

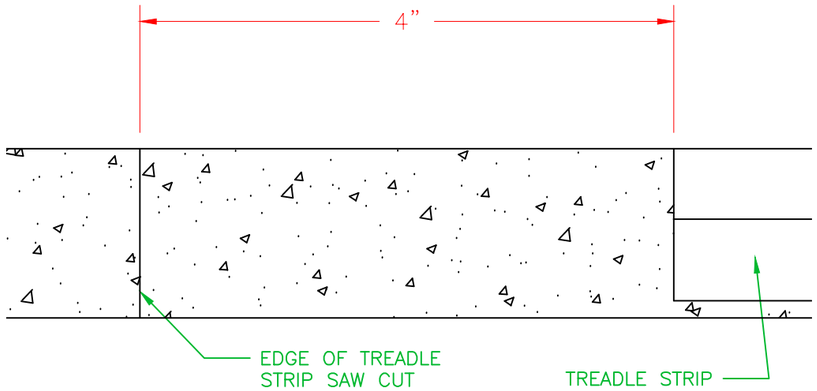

DETAIL "C"
END OF TREADLE STRIP AND TREADLE STRIP SAW CUT
(SCALE: 20:1)

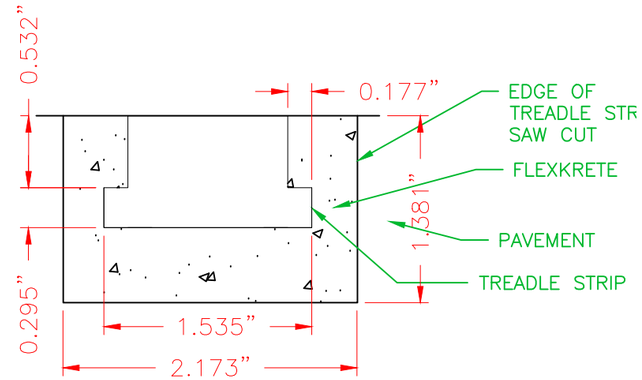

DETAIL "E–E"
TREADLE STRIP PLACEMENT/SAW CUT DIMENSIONS
(SCALE: 20:1)

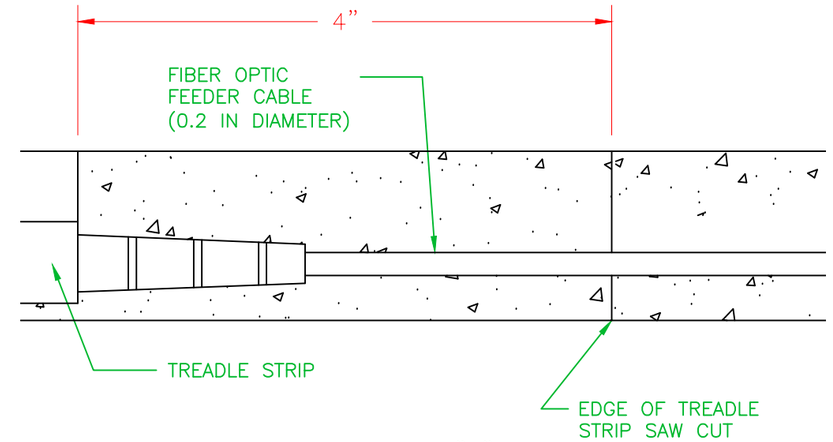

DETAIL "D"
TREADLE CONNECTION
(SCALE: 20:1)

NOTES:

1. SAW CUT AN AREA WITHIN 6" OF SAW CUT TO BE CLEARED OF ALL LOOSE DEBRIS BEFORE TREADLE STRIP INSTALLATION BEGINS. ENSURE THAT THIS AREA IS DRY TO ENSURE FLEXKRETE ADHESION TO SURFACE.
2. BEFORE PLACING TREADLE STRIPS, APPLY FLEXKRETE PRIME TO BOTTOM AND SIDE OF SAW CUTS AND TO SIDES OF PUR SENSOR TREADLE STRIPS TO ENSURE A BETTER BOND BETWEEN THE SURFACE AND THE FLEXKRETE.
3. POUR FLEXKRETE INTO SAW CUT AND SPREAD EVENLY THROUGH THE LENGTH OF THE TREADLE STRIP SAW CUT.
4. PLACE TREADLE STRIP WITH INSTALLATION HANGERS ATTACHED INTO TREADLE SAW CUT WITH ENDS OF TREADLE STRIP APPROXIMATELY 4" FROM END OF TREADLE STRIP SAW CUT. ENSURE THAT TOP SURFACE OF TREADLE STRIP IS ALIGNED WITH THE ROADWAY SURFACE.
5. POUR ADDITIONAL FLEXKRETE TO FILL GAPS BETWEEN TREADLE STRIPS AND TREADLE SAW CUT EDGES.
6. THE MAINLINE TREADLE STRIPS ARE 11'–6" IN LENGTH AS DEPICTED IN DETAIL "A".
7. THE RAMP TREADLE STRIPS ARE 13'–1" IN LENGTH AS DEPICTED IN DETAIL "B".

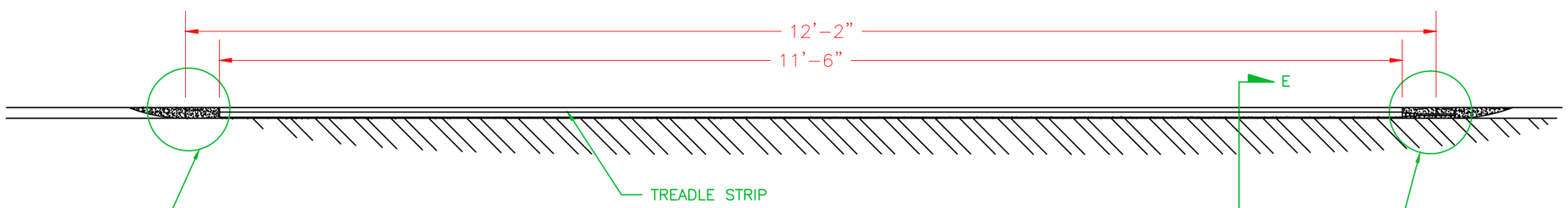

DETAIL "A"
MAINLANE TREADLE STRIP INSTALLED IN TREADLE STRIP SAW CUT

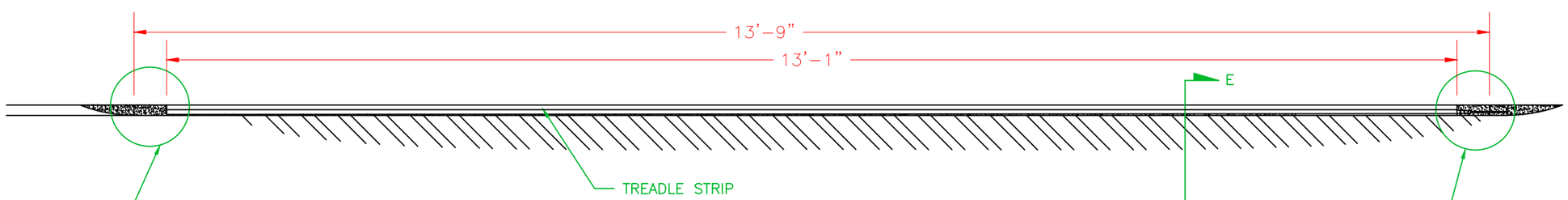

DETAIL "B"
RAMP TREADLE STRIP INSTALLED IN TREADLE STRIP SAW CUT

PRELIMINARY / DRAFT

FOR REVIEW ONLY. NOT FOR BUILD OR DESIGN WITHOUT APPROVAL BY AUTHORIZED REPRESENTATIVE OF TELVENT ENGINEERING.

DATE	DESCRIPTION OF REVISION	NAME

TELVENT
211 E SEVENTH STREET, SUITE 800, AUSTIN, TEXAS 78701

NET RMA
TOLL 49, SEGMENT 3B

TREADLE CUT DETAILS

DATE: 5/10/2012 SHEET 23 OF 47 SHEETS

DESIGNED BY:
DRAWN BY: T. HAMMOND
CHECKED BY:

TELVENT CONFIDENTIAL: THIS DOCUMENT AND THE INFORMATION CONTAINED IN IT ARE CONFIDENTIAL AND CANNOT BE COPIED OR DISCLOSED IN WHOLE OR IN PART WITHOUT THE EXPRESS WRITTEN CONSENT OF **TELVENT, INC.**

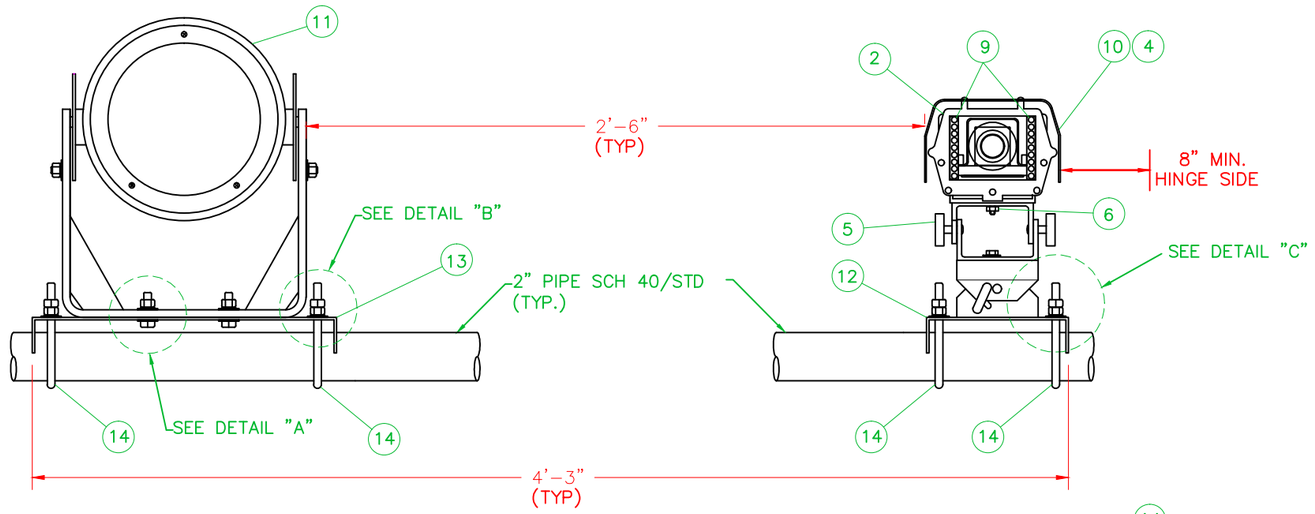

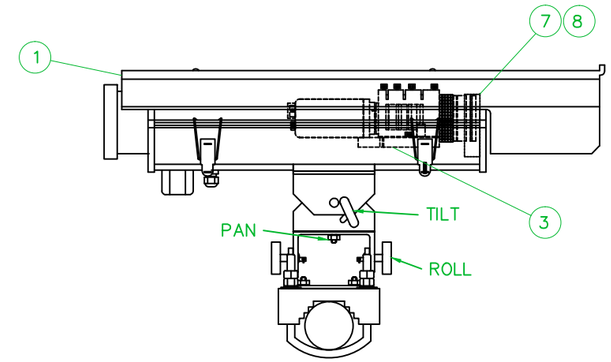

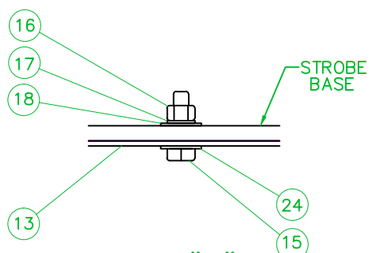

DETAIL "A"

(NOT TO SCALE) 2 PLACES

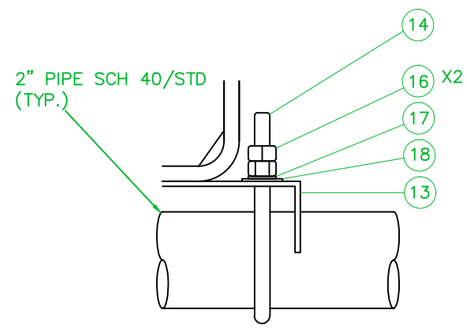

DETAIL "B"

(NOT TO SCALE) 2 PLACES

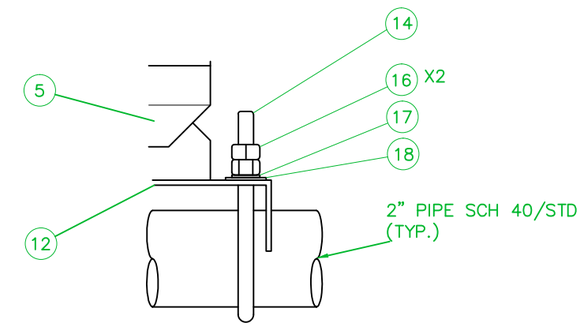

DETAIL "C"

(NOT TO SCALE) 2 PLACES

NOTES:

1. SEE TOLL SYSTEM PLAN VIEW DRAWING FOR APPROXIMATE POSITION IN LANE RELATIVE TO OTHER EQUIPMENT. SEE TOLL HANGER DETAIL (SHEETS ST02 AND ST03) FOR DETAILED LOCATION OF EQUIPMENT ON TOLL HANGERS.
2. FOR THE STROBE, INSTALL ATTACHED THE STROBE TO THE MOUNTING BRACKET PER DETAIL A.
3. ATTACH THE STROBE MOUNTING BRACKET (WITH STROBE ATTACHED) ON THE 2" PIPE USING THE U-BOLT, WASHERS, LOCK WASHERS AND NUTS PER DETAIL B. ENSURE THAT THE MOUNTING BRACKET IS APPROXIMATELY HORIZONTAL.
4. ROUTE THE STROBE POWER CABLES (NOT SHOWN) IN ACCORDANCE WITH LOCAL ELECTRICAL CODES AND TERMINATE CABLE IN ACCORDANCE WITH FIELD WIRING DRAWINGS.
5. ALIGN THE CAMERA ENCLOSURE MOUNTING SURFACE WITH THE HOLE PATTERN OF THE PAN/TILT/ROLL VIS-CAM MOUNT AND SECURE IT TO THE CAMERA MOUNT WITH THE FIVE PROVIDED ¼-20 HEX BOLTS.
6. ATTACH THE PAN/TILT/ROLL VIS-CAM MOUNT (WITH ATTACHED CAMERA ENCLOSURE) TO MOUNTING BRACKET PER DETAIL C.
7. ATTACH THE CAMERA TO THE INTERNAL CAMERA/LENS MOUNT AND INSTALL IN THE CAMERA ENCLOSURE.
8. ROUTE THE CAMERA END OF THE VIS 500 CABLE AND THE CAMERA-STROBE CABLE (NOT SHOWN) ACCORDING TO LOCAL ELECTRICAL CODE REQUIREMENTS TO THE CAMERA AND STROBE HOUSINGS. TERMINATE CABLE IN ACCORDANCE WITH FIELD WIRING DRAWINGS.
9. ALIGN THE STROBE AND CAMERA ANGLES IN ACCORDANCE WITH JAI INSTALLATION PROCEDURES TO ENSURE THAT THE IMAGE AND ILLUMINATION ARE POINTED AT THE TRIGGER POINT AND ADJUST THE FOCUS OF THE CAMERA ON THE TRIGGER POINT.

ITEM NO.	QTY REQ'D	PART NUMBER	NOMENCLATURE OR DESCRIPTION	MANUFACTURER
18	8	71014	WASHER, FLAT, 1/4", STAINLESS	FASTENALL
17	8	1171063	WASHER, LOCK, 1/4", STAINLESS	FASTENALL
16	16	1170710	NUT, HEX, 1/4"-20 UNC, STAINLESS	FASTENALL
15	2	1170005	BOLT, SIZE 1/4"-20 HCS, STAINLESS	FASTENALL
14	4	156472	U-BOLT, 3/8"-16 UNC, STAINLESS	FASTENALL
13	1	BRKT-STROBE	BRACKET, PIPE MOUNTING, STROBE	TELVENT
12	1	BRKT-CAM	BRACKET, PIPE MOUNTING, CAMERA	TELVENT
11	1	31015343	TNF-31, TRAFFIC NIGHT FLASH WITH 6FT CABLE, POWER SUPPLY INSIDE ENCLOSURE.	JAI
10	1	INCLUDED IN #1	VIS-CAM-500 SUN-SHIELD EXTENSION	JAI
9	1	INCLUDED IN #1	VIS-CAM-500 LED ILLUMINATOR.	JAI
8	1	PR032-35.5	LENS FILTER, LINEAR POLARIZING	
7	1	INCLUDED IN #1	LENS, 1" FORMAT 50MM, MEGAPIXEL	KOWA
6	5	INCLUDED IN #1	BOLT, 1/4" HEX	JAI
5	1	INCLUDED IN #1	PAN/TILT/ROLE VIS-CAM MOUNT	JAI
4	1	INCLUDED IN #1	CAMERA HOUSING I/O BOARD	JAI
3	1	INCLUDED IN #1	INTERNAL CAMERA/LENS MOUNT	JAI
2	1	INCLUDED IN #1	HOUSING W/ HEATERS, ANTI-GLARE FILTER	JAI
1	1	31015330	VIS 500 CAMERA ASSEMBLY	JAI

PRELIMINARY / DRAFT

FOR REVIEW ONLY. NOT FOR BUILD OR DESIGN WITHOUT APPROVAL BY AUTHORIZED REPRESENTATIVE OF TELVENT ENGINEERING.

DATE	DESCRIPTION OF REVISION	NAME

TELVENT
211 E SEVENTH STREET, SUITE 800, AUSTIN, TEXAS 78701

NET RMA

TOLL 49, SEGMENT 3B

VES CAMERA/STROBE DETAILS

DATE: 5/10/2012 SHEET 24 OF 47 SHEETS

DESIGNED BY:
DRAWN BY: T. HAMMOND
CHECKED BY:

TELVENT CONFIDENTIAL: THIS DOCUMENT AND THE INFORMATION CONTAINED IN IT ARE CONFIDENTIAL AND CANNOT BE COPIED OR DISCLOSED IN WHOLE OR IN PART WITHOUT THE EXPRESS WRITTEN CONSENT OF TELVENT, INC.

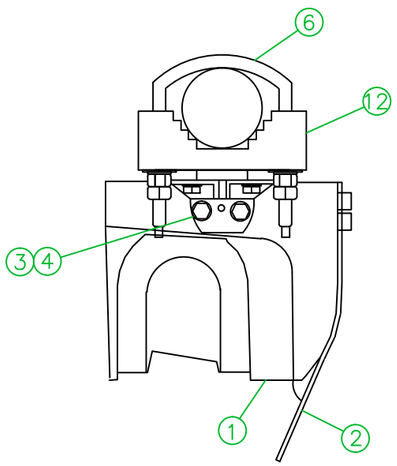

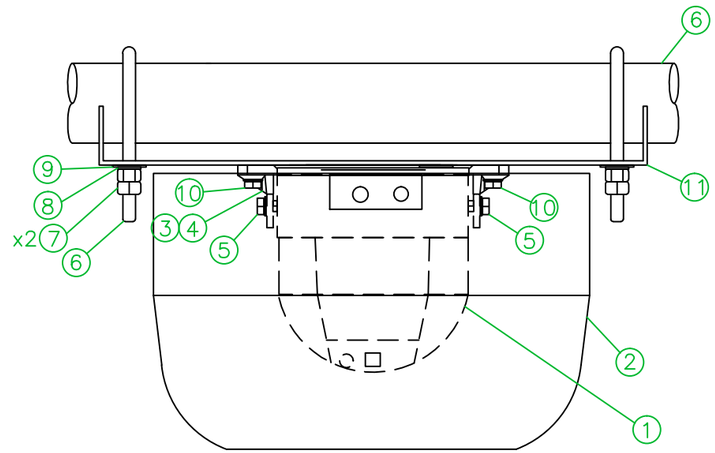

NOTES:

1. SICK SCANNER MOUNTED AS PER DETAILED DRAWINGS OVER TRAVEL LANES. SEE "TOLL SYSTEM PLAN VIEW" DRAWING FOR APPROXIMATE POSITION IN LANE RELATIVE TO OTHER TOLL SYSTEM COMPONENTS. SEE TOLL HANGER DETAILS FOR POSITION ON TOLL HANGERS.

2. ATTACH BRACKET MOUNTING TO BASE OF SICK SCANNER USING FOUR (4) M8 BOLTS.

3. ATTACH MAST MOUNTING BRACKET TO SICK MOUNTING BRACKET USING TWO (2) 3/8" BOLTS, ONE 3/8" FLAT WASHER, ONE 3/8" LOCK WASHER AND ONE M8 NUT.

4. ENSURE THAT THE CENTERLINE OF THE SICK SCANNER'S BEAM IS ALIGNED CORRECTLY ON THE PAVEMENT OF THE TRAVEL LANES RELATIVE TO THE VES CAMERA TRIGGER POINT AND TREADLE STRIPS. TIGHTEN LOCK IN ACCORDANCE WITH MANUFACTURER'S INSTRUCTIONS.

5. INSTALL DUST PREVENTION SHIELD ON THE BASE OF THE SCANNER TO PREVENT DUST AND CONDENSATION ON THE FRONT WINDOW OF THE SCANNER.

ITEM NO.	QTY REQ'D	PART NUMBER	NOMENCLATURE OR DESCRIPTION	MANUFACTURER
11	1	BRKT-SCANNER	BRACKET, PIPE MOUNTING, SCANNER	TELVENT
10	4	TBD	BOLT, 3/8", LENGTH TBD, STAINLESS	FASTENAL
9	4	71014	WASHER, FLAT, 1/4", STAINLESS	FASTENAL
8	4	1171063	WASHER, LOCK, 1'4", STAINLESS	FASTENAL
7	8	1170710	NUT, HEX, 1/4"-20 UNC, STAINLESS	FASTENAL
6	2	156472	U-BOLT, 3/8"-16 UNC, STAINLESS	FASTENAL
5	4	TBD	BOLT, M8, LENGTH TBD, STAINLESS	FASTENAL
4	1	2015624	MOUNTING BRACKET SET 2	SICK
3	1	2015623	MOUNTING BRACKET SET 1	SICK
2	1	2056850	PROTECTION HODD	SICK
1	1	LMS511-10100 PRO	SICK SCANNER	SICK

PRELIMINARY / DRAFT

FOR REVIEW ONLY. NOT FOR BUILD OR DESIGN WITHOUT APPROVAL BY AUTHORIZED REPRESENTATIVE OF TELVENT ENGINEERING.

DATE	DESCRIPTION OF REVISION	NAME

TELVENT
211 E SEVENTH STREET, SUITE 800, AUSTIN, TEXAS 78701

NET RMA
TOLL 49, SEGMENT 3B

SICK SCANNER DETAILS

DATE: 5/10/2012 SHEET 25 OF 47 SHEETS

DESIGNED BY:
DRAWN BY: T. HAMMOND
CHECKED BY:

TELVENT CONFIDENTIAL: THIS DOCUMENT AND THE INFORMATION CONTAINED IN IT ARE CONFIDENTIAL AND CANNOT BE COPIED OR DISCLOSED IN WHOLE OR IN PART WITHOUT THE EXPRESS WRITTEN CONSENT OF TELVENT, INC.

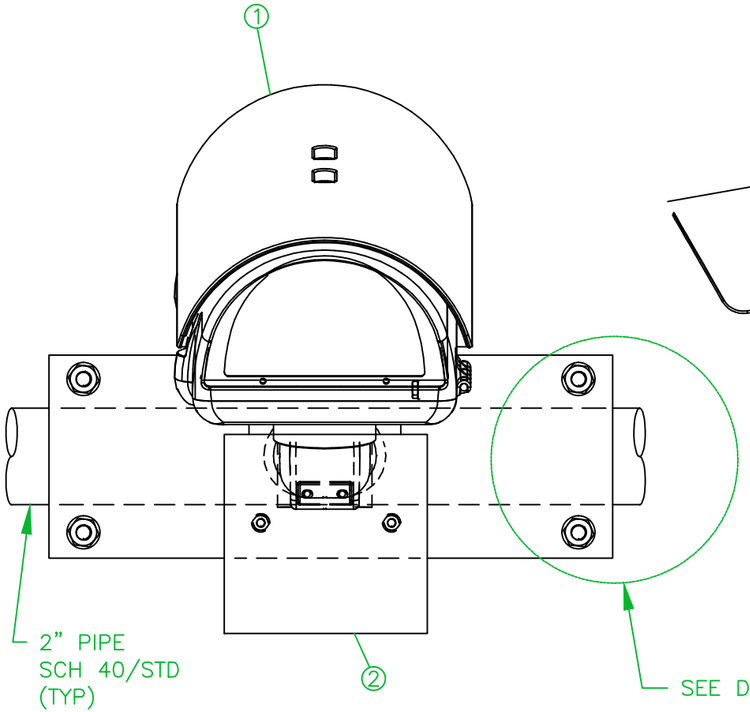

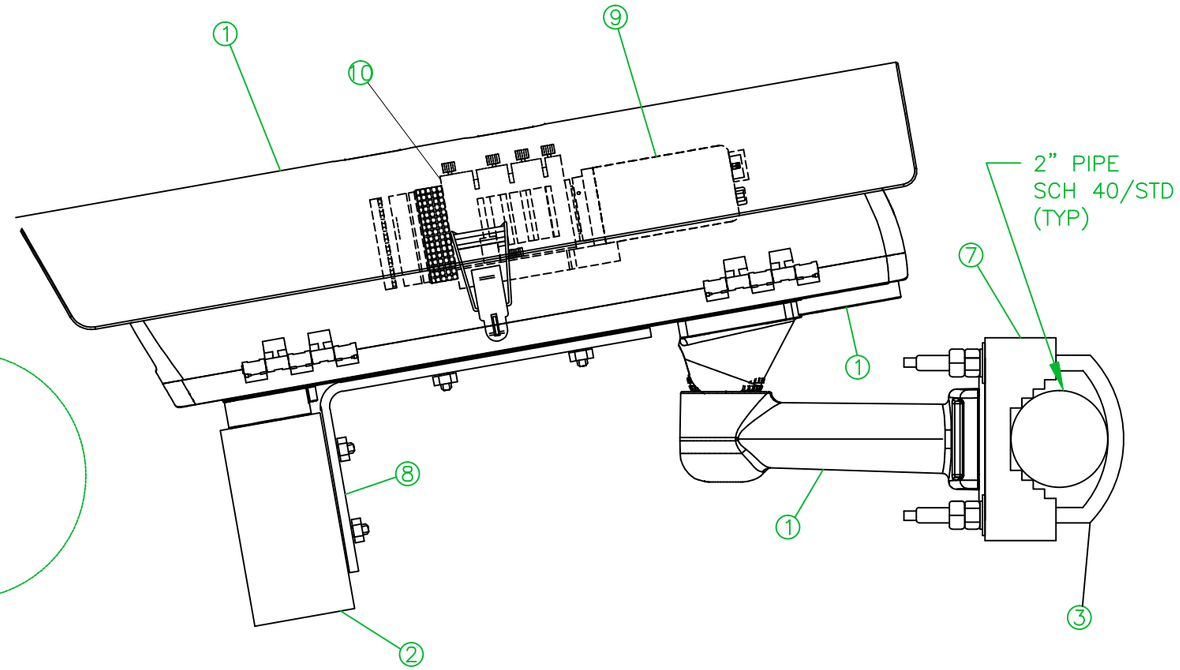

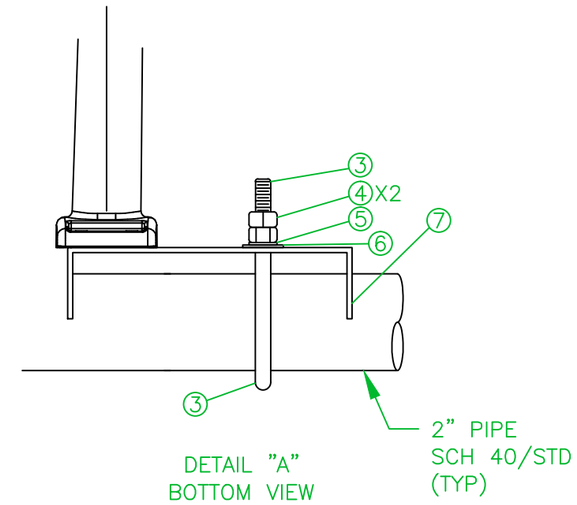

DETAIL "A"
BOTTOM VIEW

PAN/TILT/ROLL MOUNT
INSTALLATION ON TOLL
HANGER PIPE

DIGITAL VIDEO AUDIT SYSTEM CAMERA ON TOLL HANGER

NOTES:

1. SEE TOLL SYSTEM PLAN VIEW DRAWING FOR APPROXIMATE POSITION IN LANE RELATIVE TO OTHER EQUIPMENT. SEE TOLL HANGER DETAIL FOR DETAILED LOCATION OF EQUIPMENT ON TOLL HANGERS.
2. DVAS CAMERA WIRING (NOT SHOWN) TO BE ROUTED IN ACCORDANCE WITH LOCAL ELECTRICAL CODES AND TERMINATED IN ACCORDANCE WITH FIELD WIRING DRAWINGS.
3. ALIGN THE CAMERA ANGLES AND ADJUST THE CAMERA FOCUS AND ZOOM TO PROVIDE AN IMAGE OF THE TOLL ZONE ZONE IN ACCORDANCE WITH THE PROJECT REQUIREMENTS.
4. QUANTITIES APPLIES ONLY FOR A SINGLE DVAS INSTALLATION ATTACHED TO TOLL HANGER.

ITEM NO.	QTY REQ'D	PART NUMBER	NOMENCLATURE OR DESCRIPTION	MANUFACTURER
10	1	TG3Z0312FCS-MPIR	1/3" IR MEGAPIXEL 3.1-8MM VARIFOCAL LENS	COMPUTAR
9	1	BIP2-1300C-DN	1.3 MEGAPIXEL (1280x960), IP CAMERA, DAY/NIGHT	BASLER
8	1	AT8052	AT-15 MOUNTING BRACKET	AXTON
7	1	BRKT-CAM	BRACKET, PIPE MOUNTING, CAMERA	TELVENT
6	4	71014	WASHER, FLAT, 1/4", STAINLESS	FASTENALL
5	4	1171063	WASHER, LOCK, 1/4", STAINLESS	FASTENALL
4	8	1170710	NUT, HEX, 1/4"-20 UNC, STAINLESS	FASTENALL
3	2	156472	U-BOLT, 3/8"-16 UNC, STAINLESS	FASTENALL
2	1	AT-15	SUPPLEMENTAL IR LIGHTING, 850NM	AXTON
1	1	HSG1-O-W	OUTDOOR HOUSING WITH HEATER, BLOWER, WALL MOUNT AND SUN SHEILD	ARECONT

PRELIMINARY / DRAFT

FOR REVIEW ONLY. NOT FOR BUILD OR DESIGN WITHOUT APPROVAL BY AUTHORIZED REPRESENTATIVE OF TELVENT ENGINEERING.

DATE	DESCRIPTION OF REVISION	NAME

TELVENT
211 E SEVENTH STREET, SUITE 800, AUSTIN, TEXAS 78701

NET RMA
TOLL 49, SEGMENT 3B

DVAS CAMERA DETAILS

DATE: 5/10/2012 SHEET 26 OF 47 SHEETS

DESIGNED BY:
DRAWN BY: T. HAMMOND
CHECKED BY:

TELVENT CONFIDENTIAL: THIS DOCUMENT AND THE INFORMATION CONTAINED IN IT ARE CONFIDENTIAL AND CANNOT BE COPIED OR DISCLOSED IN WHOLE OR IN PART WITHOUT THE EXPRESS WRITTEN CONSENT OF TELVENT, INC.

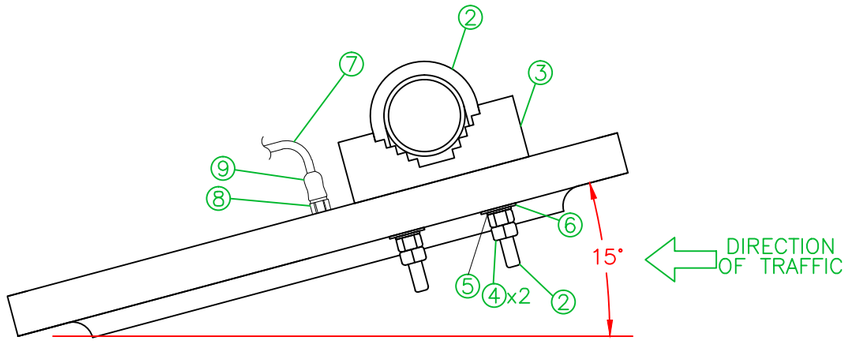

SIDE VIEW
BASE BRACKET INSTALLATION TO ANTENNA

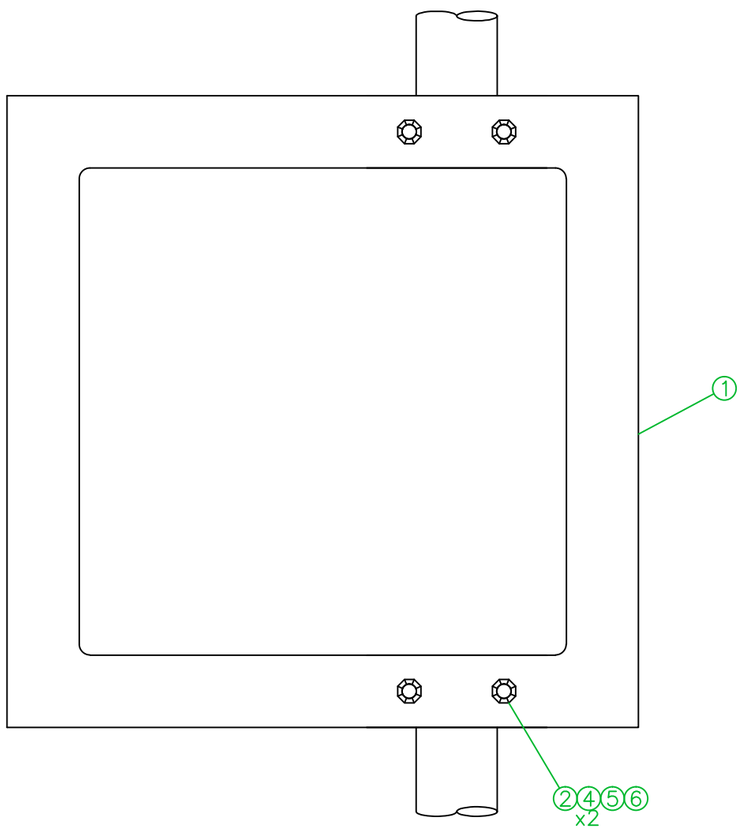

BOTTOM VIEW
BASE BRACKET INSTALLATION TO ANTENNA

ITEM NO.	QTY REQ'D	PART NUMBER	NOMENCLATURE OR DESCRIPTION	MANUFACTURER
9	1	221213	WEATHERPROOFING KIT, CONNECTORS AND SPLICES	TIMES MICRO
8	1	EZ-1200-NMC	CONNECTOR, N-TYPE COAX, STRAIGHT PLUG, MALE	TIMES MICRO
7	1	LMR-600	CABLE, COAX	TIMES MICRO
6	4	71014	WASHER, FLAT, 1/4", STAINLESS	FASTENAL
5	4	1171063	WASHER, LOCK, 1/4", STAINLESS	FASTENAL
4	8	117076	NUT, HEX, 1/4"-20 UNC, STAINLESS	FASTENAL
3	1	BRKT-ANT	BRACKET, PIPE MOUNTING, SCANNER	TELVENT
2	2	158472	U-BOLT, 3/8"-16 UNC, STAINLESS	FASTENAL
1	1	12-3152-002	AA3152 UTA ANTENNA WITH CHECK TAG	TRANSCORE

NOTES:

1. ANTENNA MOUNTED OVER CENTER LINE OF TRAVEL LANES. SEE "TOLL SYSTEM PLAN VIEW" DRAWING FOR APPROXIMATE POSITION IN LANE RELATIVE TO OTHER TOLL SYSTEM COMPONENTS.
2. INSTALL ANTENNA TO TOLL HANGER 2" PIPE USING THE CLAMPING BRACKET AS SHOWN.
3. TIGHTEN THE BRACKET USING M8 SPRING WASHER, M8 NUT AND M8X70 BOLT. USE TIGHTENING TORQUE OF 14N/M.
4. INSTALL TIMES MICROWAVE N–TYPE CONNECTOR (OR EQUIVALENT) TO COAX CABLE AND HEAT SHRINK TO COAX CABLE CONNECTOR TO COVER THE CONNECTOR AND THE CABLE PER MANUFACTURER'S INSTRUCTIONS.
5. ATTACH N–TYPE MALE TERMINATED COAX CABLE TO ANTENNA'S N–TYPE FEMALE CONNECTOR. USE TIGHTENING TORQUE IN ACCORDANCE WITH MANUFACTURER'S INSTRUCTIONS.
6. APPLY ANDREW WEATHERPROOFING KIT (OR EQUIVALENT) PER MANUFACTURER'S INSTRUCTIONS TO PROTECT IT FROM MOISTURE PENETRATION AND LOOSENING OF CONNECTIONS FROM VIBRATIONS CAUSED BY STRONG WINDS. ENSURE THAT WHEN APPLIED THE TAPE IS ABOVE 32°F TO ENSURE ADHESION AND THE LAST WRAP OF TAPE IS APPLIED FROM TOP TO BOTTOM TO CREATE A SHINGLE EFFECT.

PRELIMINARY / DRAFT

FOR REVIEW ONLY. NOT FOR BUILD OR DESIGN WITHOUT APPROVAL BY AUTHORIZED REPRESENTATIVE OF TELVENT ENGINEERING.

DATE	DESCRIPTION OF REVISION	NAME

TELVENT
211 E SEVENTH STREET, SUITE 800, AUSTIN, TEXAS 78701

NET RMA
TOLL 49, SEGMENT 3B

AVI ANTENNA DETAILS

DATE: 5/10/2012 SHEET 27 OF 47 SHEETS

DESIGNED BY:
DRAWN BY: T. HAMMOND
CHECKED BY:

TELVENT CONFIDENTIAL: THIS DOCUMENT AND THE INFORMATION CONTAINED IN IT ARE CONFIDENTIAL AND CANNOT BE COPIED OR DISCLOSED IN WHOLE OR IN PART WITHOUT THE EXPRESS WRITTEN CONSENT OF TELVENT, INC.

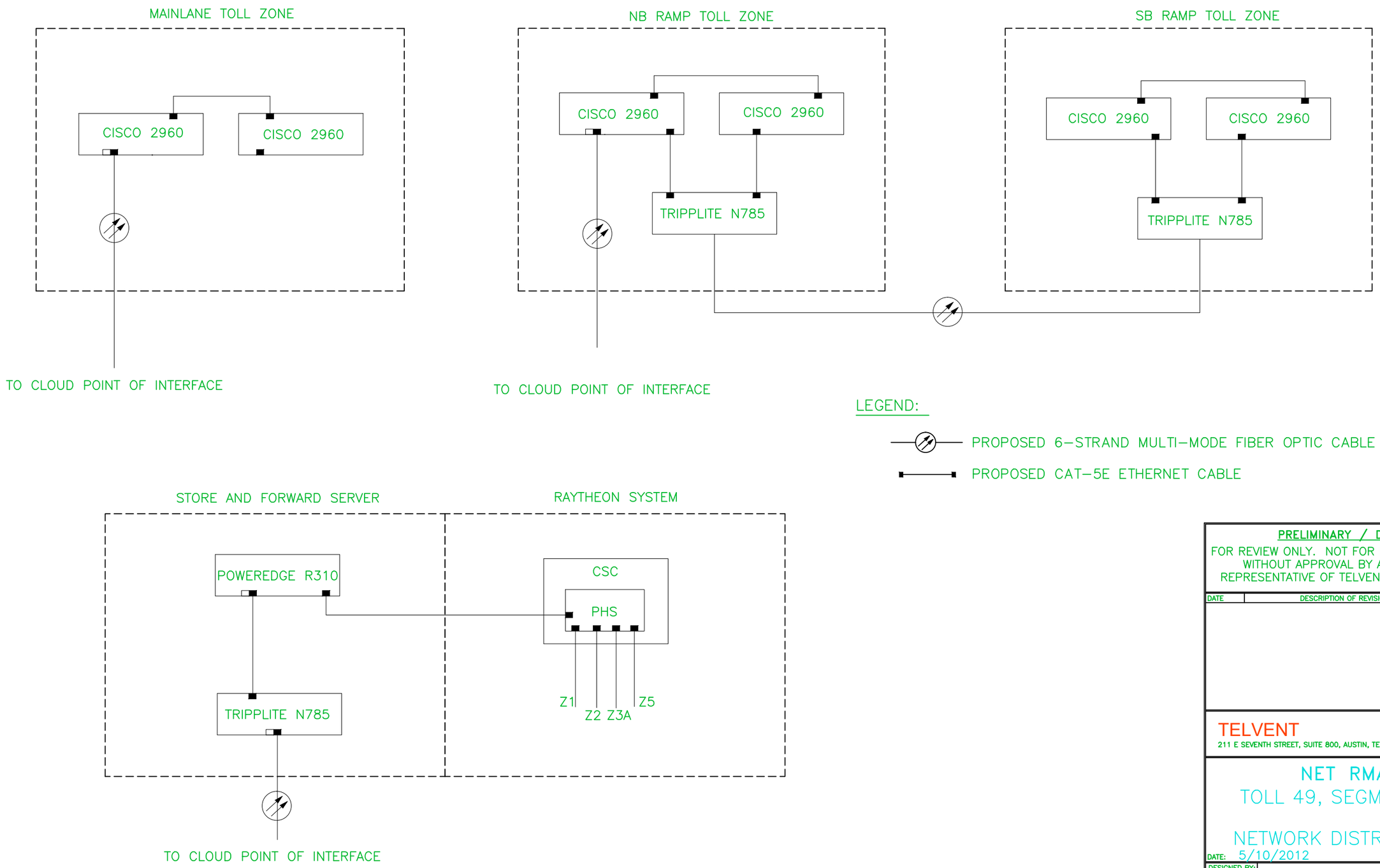

PRELIMINARY / DRAFT

FOR REVIEW ONLY. NOT FOR BUILD OR DESIGN WITHOUT APPROVAL BY AUTHORIZED REPRESENTATIVE OF TELVENT ENGINEERING.

DATE	DESCRIPTION OF REVISION	NAME

TELVENT
211 E SEVENTH STREET, SUITE 800, AUSTIN, TEXAS 78701

NET RMA
TOLL 49, SEGMENT 3B

NETWORK DISTRIBUTION

DATE: 5/10/2012 SHEET 28 OF 47 SHEETS

DESIGNED BY:
DRAWN BY: T. HAMMOND
CHECKED BY:

TELVENT CONFIDENTIAL: THIS DOCUMENT AND THE INFORMATION CONTAINED IN IT ARE CONFIDENTIAL AND CANNOT BE COPIED OR DISCLOSED IN WHOLE OR IN PART WITHOUT THE EXPRESS WRITTEN CONSENT OF **TELVENT, INC.**

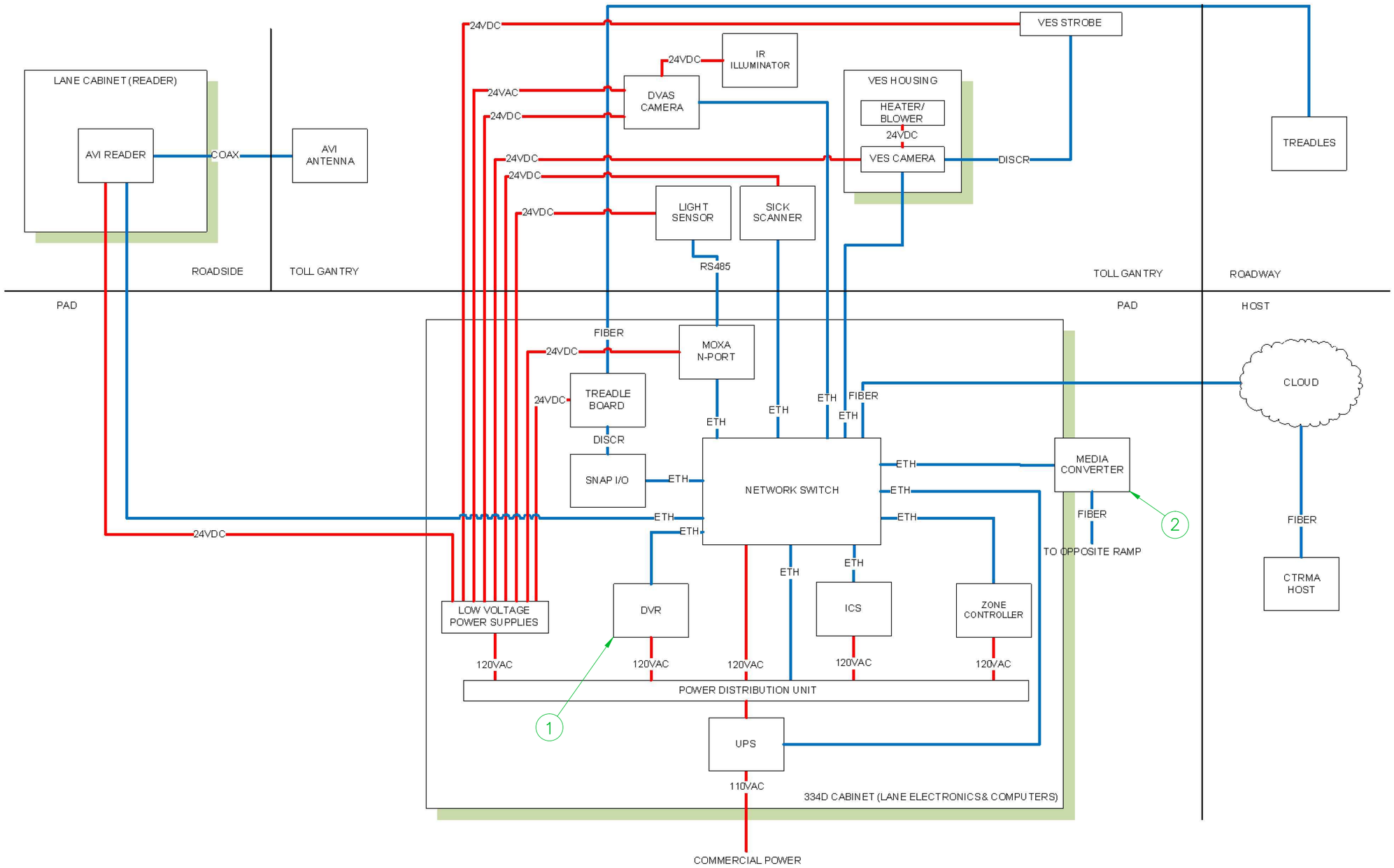

NOTES:

1. DVR LOCATED AT ONLY THE MAINLANE AND NB RAMP.
2. MEDIA CONVERTER(S) LOCATED AT ONLY THE NB AND SB RAMPS.

PRELIMINARY / DRAFT

FOR REVIEW ONLY. NOT FOR BUILD OR DESIGN WITHOUT APPROVAL BY AUTHORIZED REPRESENTATIVE OF TELVENT ENGINEERING.

DATE	DESCRIPTION OF REVISION	NAME

TELVENT
211 E SEVENTH STREET, SUITE 800, AUSTIN, TEXAS 78701

NET RMA
TOLL 49, SEGMENT 3B

SYSTEM BLOCK DIAGRAM

DATE: 5/10/2012 SHEET 29 OF 47 SHEETS

DESIGNED BY:
DRAWN BY: T. HAMMOND
CHECKED BY:

TELVENT CONFIDENTIAL: THIS DOCUMENT AND THE INFORMATION CONTAINED IN IT ARE CONFIDENTIAL AND CANNOT BE COPIED OR DISCLOSED IN WHOLE OR IN PART WITHOUT THE EXPRESS WRITTEN CONSENT OF **TELVENT, INC.**

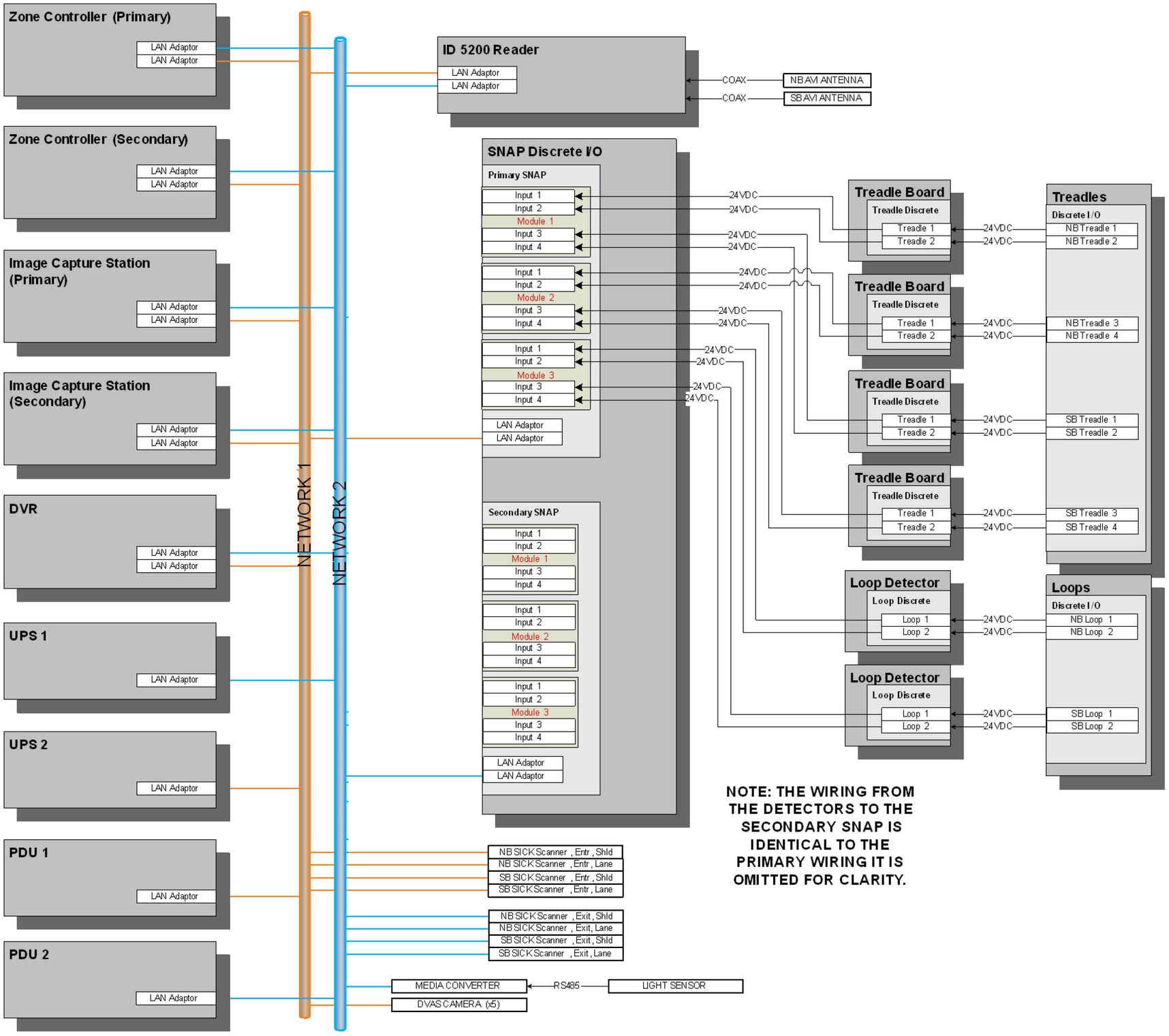

NOTE: THE WIRING FROM THE DETECTORS TO THE SECONDARY SNAP IS IDENTICAL TO THE PRIMARY WIRING IT IS OMITTED FOR CLARITY.

PRELIMINARY / DRAFT

FOR REVIEW ONLY. NOT FOR BUILD OR DESIGN WITHOUT APPROVAL BY AUTHORIZED REPRESENTATIVE OF TELVENT ENGINEERING.

DATE	DESCRIPTION OF REVISION	NAME

TELVENT
211 E SEVENTH STREET, SUITE 800, AUSTIN, TEXAS 78701

NET RMA
TOLL 49, SEGMENT 3B
MAINLANE
SYSTEM I/O DIAGRAM

DATE: 5/10/2012 SHEET 30 OF 47 SHEETS

DESIGNED BY:
DRAWN BY: T. HAMMOND
CHECKED BY:

TELVENT CONFIDENTIAL: THIS DOCUMENT AND THE INFORMATION CONTAINED IN IT ARE CONFIDENTIAL AND CANNOT BE COPIED OR DISCLOSED IN WHOLE OR IN PART WITHOUT THE EXPRESS WRITTEN CONSENT OF **TELVENT, INC.**

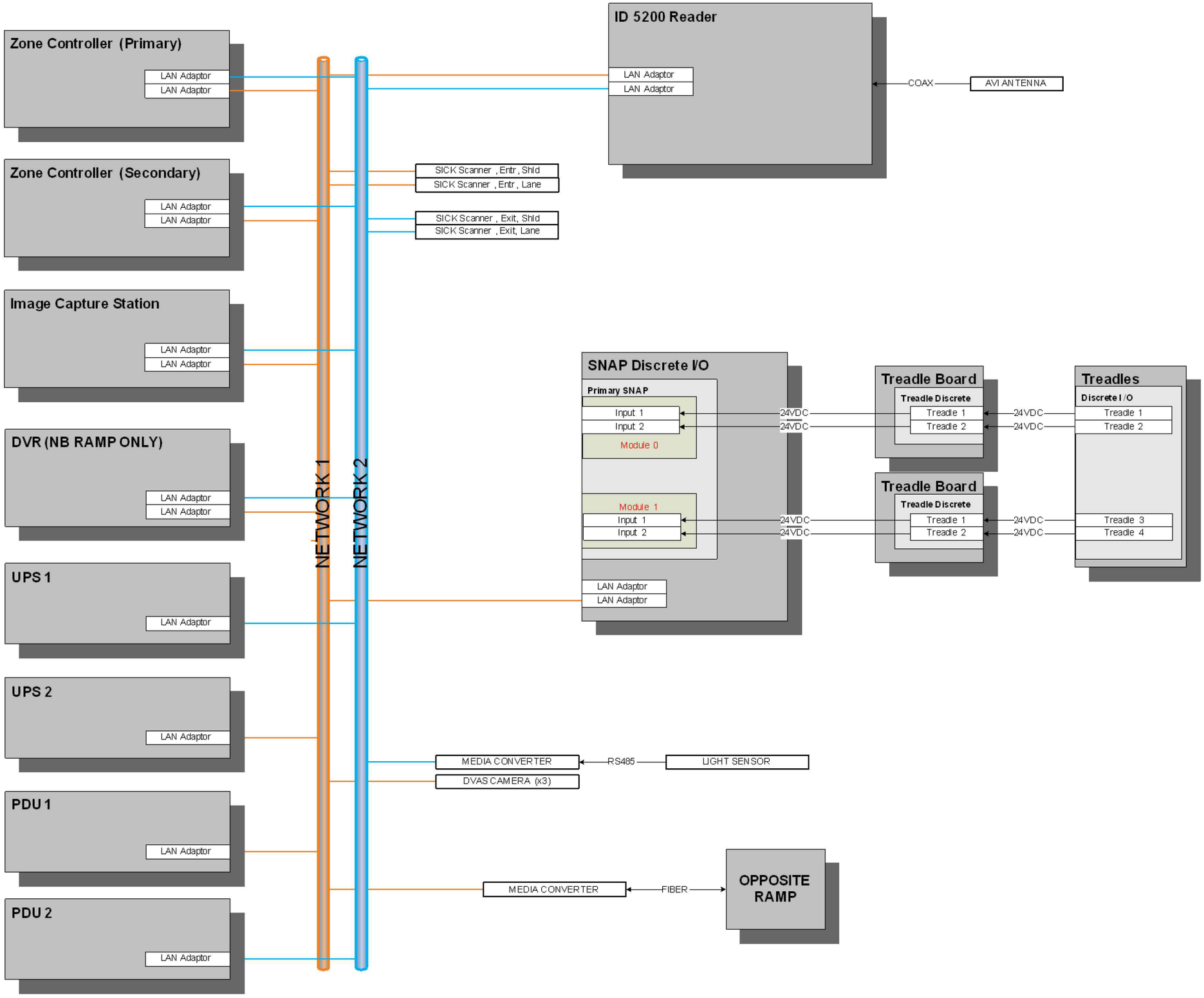

PRELIMINARY / DRAFT

FOR REVIEW ONLY. NOT FOR BUILD OR DESIGN WITHOUT APPROVAL BY AUTHORIZED REPRESENTATIVE OF TELVENT ENGINEERING.

DATE	DESCRIPTION OF REVISION	NAME

TELVENT
211 E SEVENTH STREET, SUITE 800, AUSTIN, TEXAS 78701

NET RMA
TOLL 49, SEGMENT 3B
RAMP
SYSTEM I/O DIAGRAM

DATE: 5/10/2012

SHEET 31 OF 47 SHEETS

DESIGNED BY:
DRAWN BY: T. HAMMOND
CHECKED BY:

TELVENT CONFIDENTIAL: THIS DOCUMENT AND THE INFORMATION CONTAINED IN IT ARE CONFIDENTIAL AND CANNOT BE COPIED OR DISCLOSED IN WHOLE OR IN PART WITHOUT THE EXPRESS WRITTEN CONSENT OF **TELVENT, INC.**

NETRMA RF FREQUENCY ALLOCATION

NOTES:

1. FREQUENCIES CONFIRMED WITH FCC LICENSE, REFERENCE COPY, GRANTED <date>.

LEGEND LEGEND

frequency MHz
LANE #
DIRECTION
Lane Type

	XXX.XX	XXX.XX	
4	**3**	**2**	**1**
SB	SB	NB	NB
SHLD	TRAV	TRAV	SHLD

MAINLANE SOUTHBOUND

MAINLANE NORTHBOUND

	XXX.XX
1	**2**
SB	SB
SHLD	TRAV

RAMP SOUTHBOUND

XXX.XX	
2	**1**
NB	NB
TRAV	SHLD

RAMP NORTHBOUND

PRELIMINARY / DRAFT

FOR REVIEW ONLY. NOT FOR BUILD OR DESIGN WITHOUT APPROVAL BY AUTHORIZED REPRESENTATIVE OF TELVENT ENGINEERING.

DATE	DESCRIPTION OF REVISION	NAME

TELVENT

211 E SEVENTH STREET, SUITE 800, AUSTIN, TEXAS 78701

NET RMA

TOLL 49 SEGMENT 3B

FREQUENCY PLAN

DATE: 5/10/2012 SHEET 32 OF 47 SHEETS

DESIGNED BY:

DRAWN BY: T. HAMMOND

CHECKED BY:

TELVENT CONFIDENTIAL: THIS DOCUMENT AND THE INFORMATION CONTAINED IN IT ARE CONFIDENTIAL AND CANNOT BE COPIED OR DISCLOSED IN WHOLE OR IN PART WITHOUT THE EXPRESS WRITTEN CONSENT OF TELVENT, INC.

VIS-CAM Pin-out Schematic			
I/O Board X4	Signal	Color	Cable
1	Eth A+	WHT/ORG	Cat6
2	Eth A-	ORG	Cat6
3	Eth B+	WHT/GRN	Cat6
4	Eth B-	GRN	Cat6
5	Eth C+	WHT/BLU	Cat6
6	Eth C-	BLU	Cat6
7	Eth D+	WHT/BRN	Cat6
8	Eth D-	BRN	Cat6
9	GND	BLK	7993A
10	+24VDC	RED	7993A
11	VINIT+	GRN	7993A
12	VINIT-	WHT	7993A
13	Unused	N/A	N/A
14	Unused	N/A	N/A
15	Unused	N/A	N/A
16	Unused	N/A	N/A

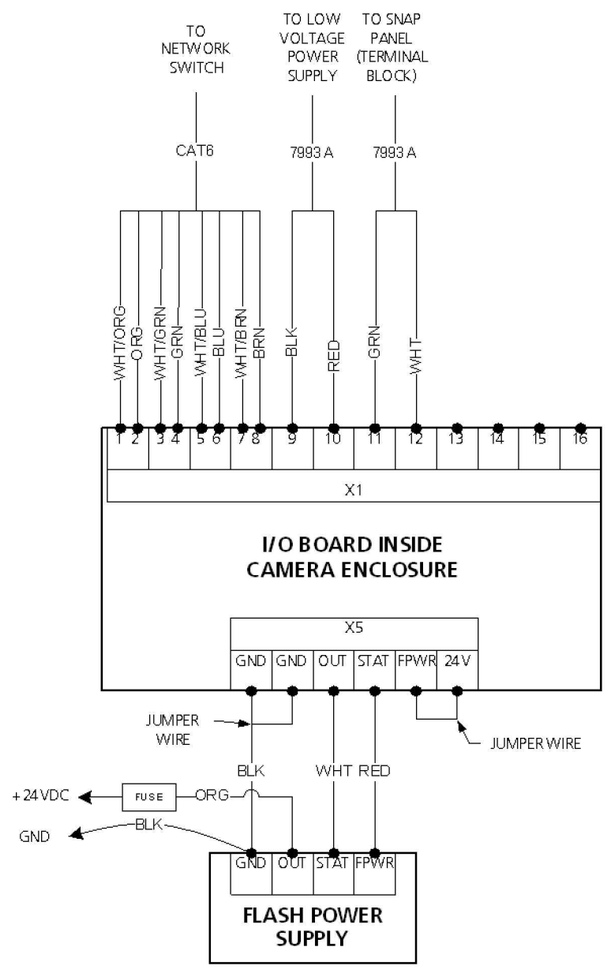

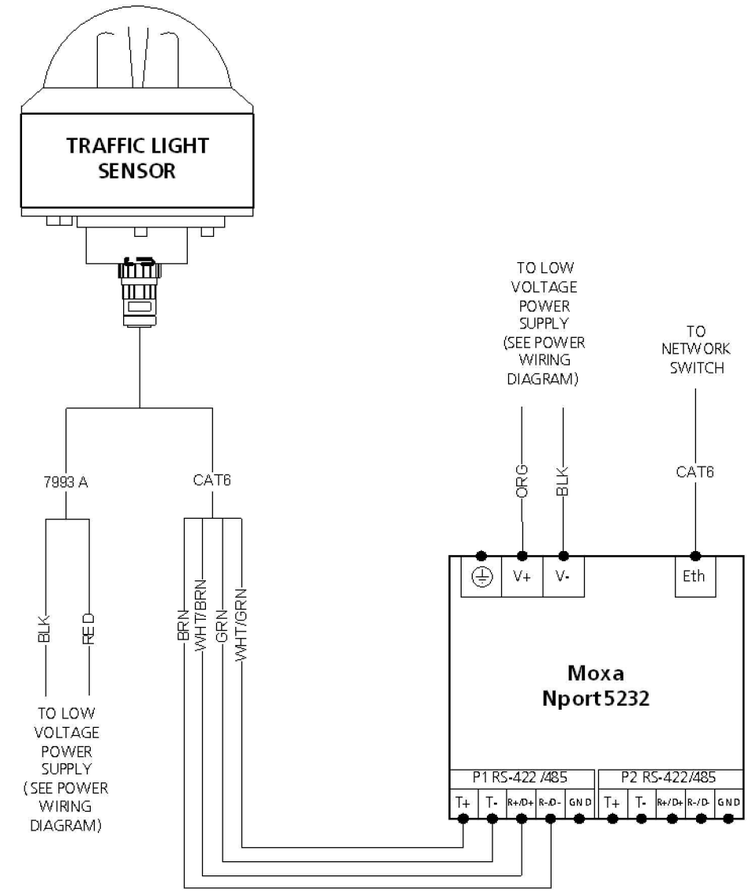

TLS Pin-out Schematic			
X3 Pin	Signal	Color	Cable
1	+24VDC	WHT	7993A
2	GND	BLK	7993A
3	D0+	WHT/GRN	Cat6
4	D0-	GRN	Cat6
5	D1+	WHT/BRN	Cat6
6	D1-	BRN	Cat6

NOTES:

1. FRONT PLATE VES CAMERAS CONNECT TO NETWORK SWITCH ONE.
2. REAR PLATE VES CAMERAS CONNECT TO NETWORK SWITCH TWO.
3. SEE RESPECTIVE I/O BLOCK DIAGRAM FOR CONNECTION DETAILS.

PRELIMINARY / DRAFT

FOR REVIEW ONLY. NOT FOR BUILD OR DESIGN WITHOUT APPROVAL BY AUTHORIZED REPRESENTATIVE OF TELVENT ENGINEERING.

DATE	DESCRIPTION OF REVISION	NAME

TELVENT
211 E SEVENTH STREET, SUITE 800, AUSTIN, TEXAS 78701

NET RMA
TOLL 49 SEGMENT 3B

VES COMMO WIRING

DATE: 5/10/2012 SHEET 36 OF 47 SHEETS

DESIGNED BY:
DRAWN BY: T. HAMMOND
CHECKED BY:

TELVENT CONFIDENTIAL: THIS DOCUMENT AND THE INFORMATION CONTAINED IN IT ARE CONFIDENTIAL AND CANNOT BE COPIED OR DISCLOSED IN WHOLE OR IN PART WITHOUT THE EXPRESS WRITTEN CONSENT OF TELVENT, INC.

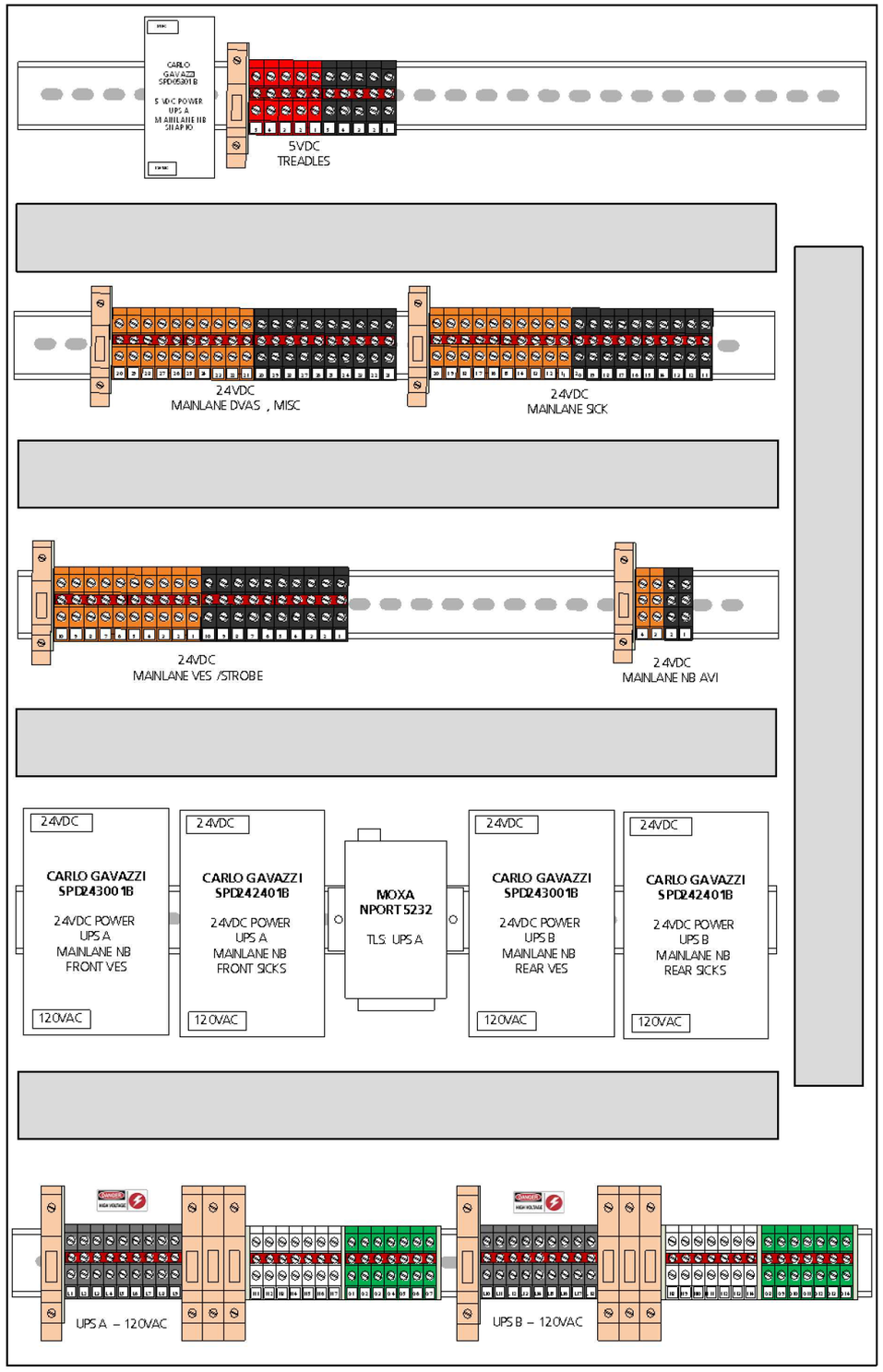

NETRMA MAINLANE NB POWER SHELF LAYOUT

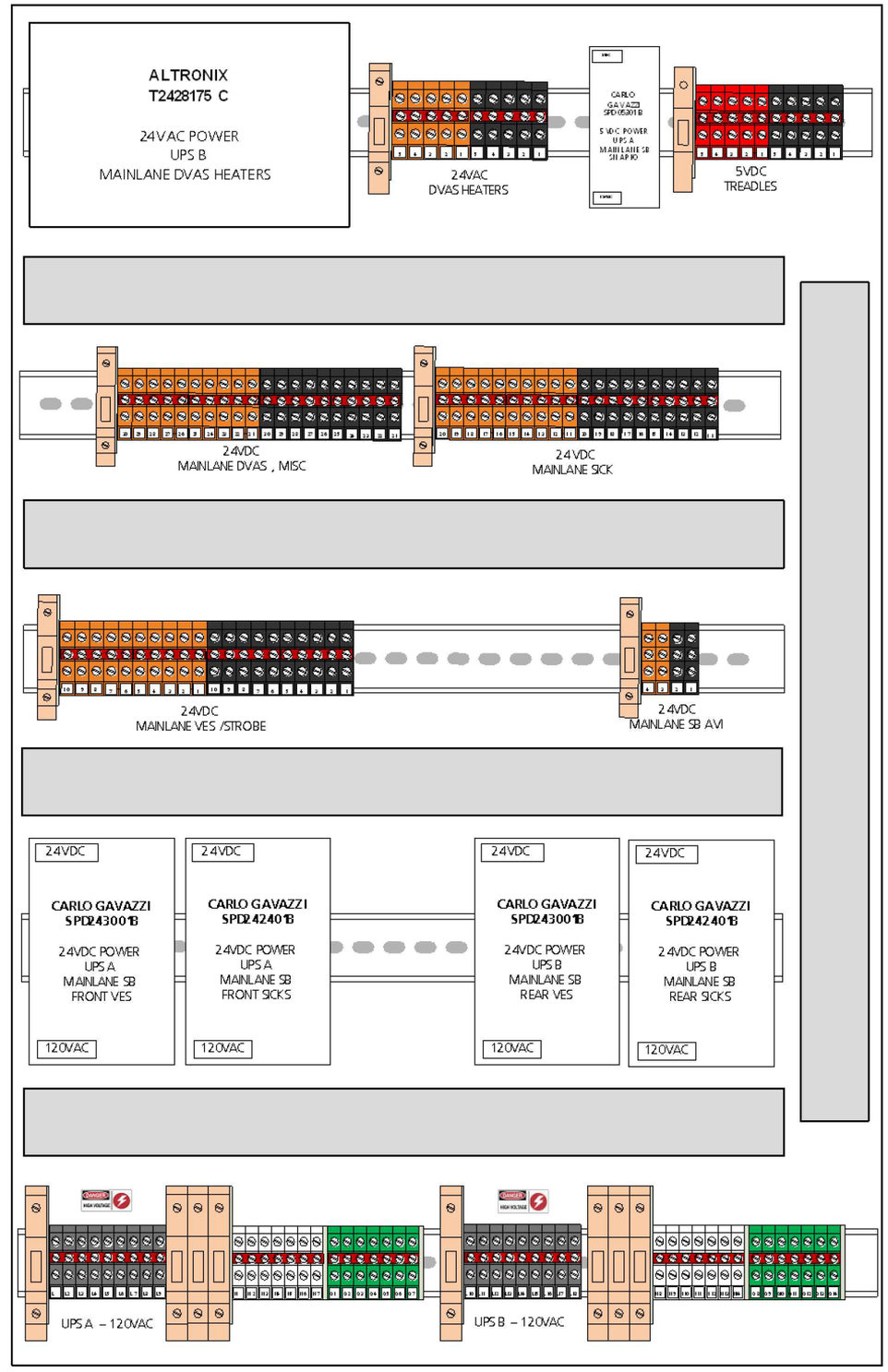

NETRMA MAINLANE SB POWER SHELF LAYOUT

PRELIMINARY / DRAFT

FOR REVIEW ONLY. NOT FOR BUILD OR DESIGN WITHOUT APPROVAL BY AUTHORIZED REPRESENTATIVE OF TELVENT ENGINEERING.

DATE	DESCRIPTION OF REVISION	NAME

TELVENT
211 E SEVENTH STREET, SUITE 800, AUSTIN, TEXAS 78701

NET RMA
TOLL 49 SEGMENT 3B MAINLANE
POWER SHELF COMPONENTS

DATE: 5/10/2012

DESIGNED BY:

DRAWN BY: T. HAMMOND

CHECKED BY:

TELVENT CONFIDENTIAL: THIS DOCUMENT AND THE INFORMATION CONTAINED IN IT ARE CONFIDENTIAL AND CANNOT BE COPIED OR DISCLOSED IN WHOLE OR IN PART WITHOUT THE EXPRESS WRITTEN CONSENT OF **TELVENT, INC.**

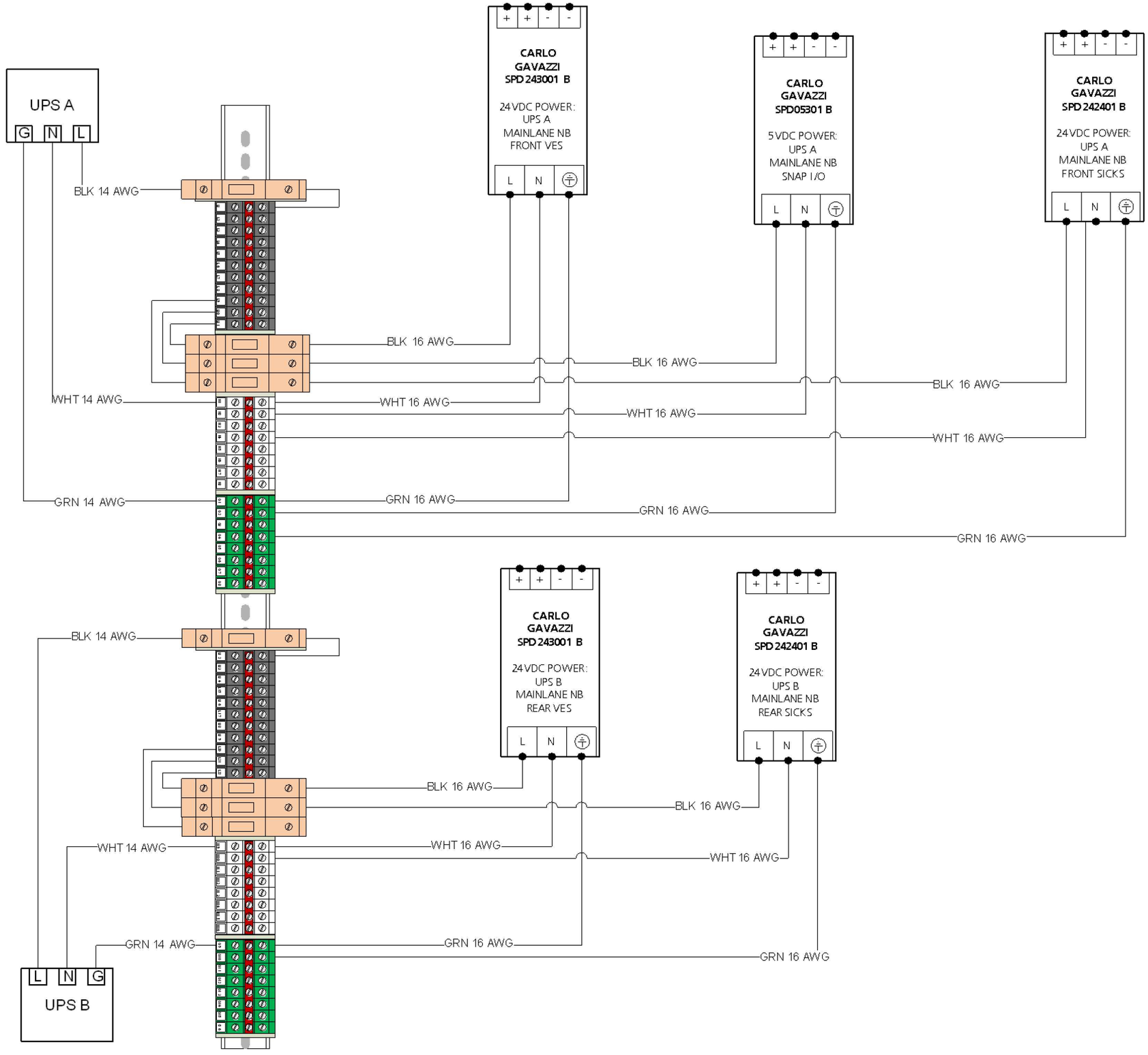

PRELIMINARY / DRAFT

FOR REVIEW ONLY. NOT FOR BUILD OR DESIGN WITHOUT APPROVAL BY AUTHORIZED REPRESENTATIVE OF TELVENT ENGINEERING.

DATE	DESCRIPTION OF REVISION	NAME

TELVENT
211 E SEVENTH STREET, SUITE 800, AUSTIN, TEXAS 78701

NET RMA
TOLL 49 SEGMENT 3B MAINLANE NORTHBOUND POWER WIRING

DATE: 5/10/2012 SHEET 34 OF 47 SHEETS

DESIGNED BY:
DRAWN BY: T. HAMMOND
CHECKED BY:

TELVENT CONFIDENTIAL: THIS DOCUMENT AND THE INFORMATION CONTAINED IN IT ARE CONFIDENTIAL AND CANNOT BE COPIED OR DISCLOSED IN WHOLE OR IN PART WITHOUT THE EXPRESS WRITTEN CONSENT OF **TELVENT, INC.**

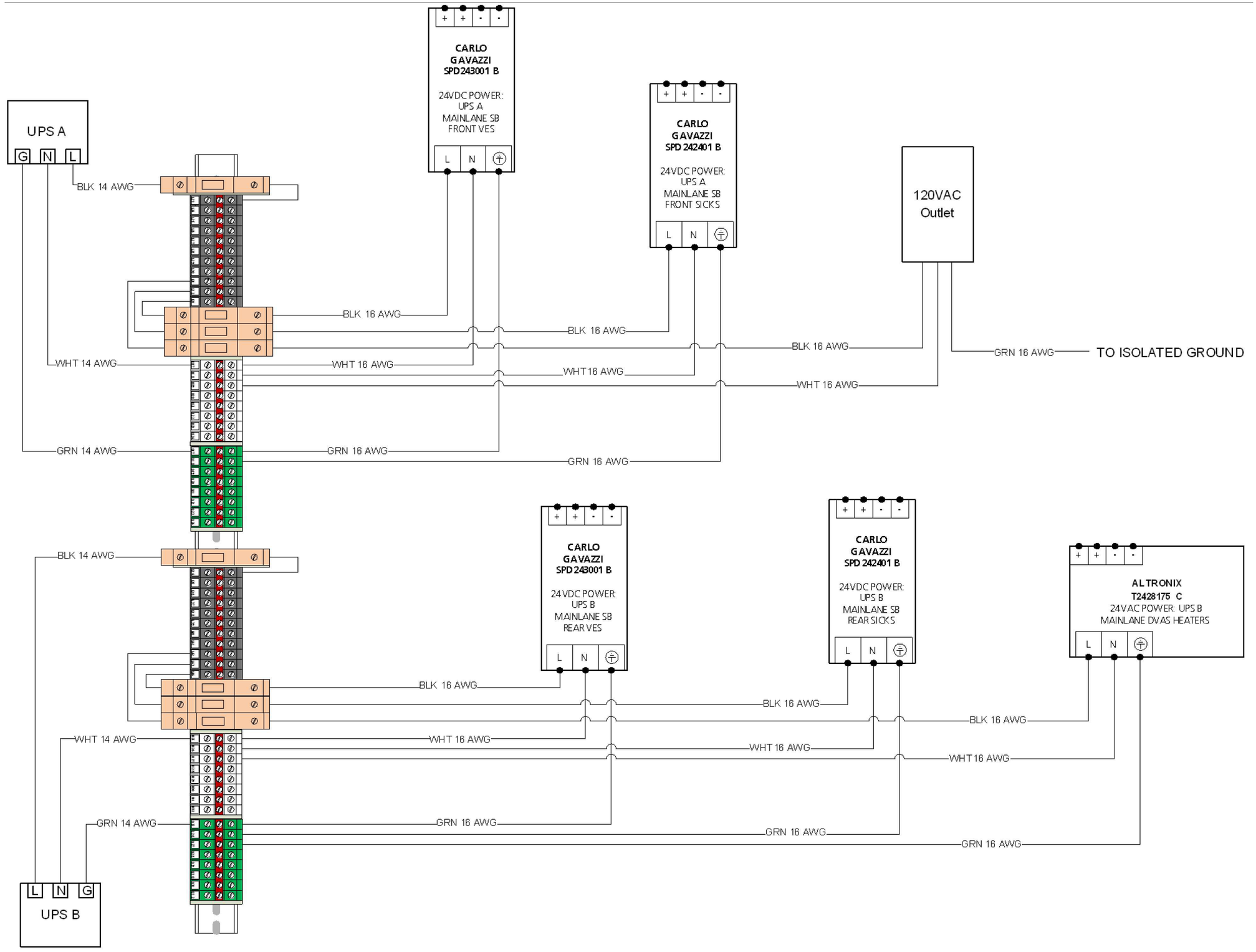

PRELIMINARY / DRAFT

FOR REVIEW ONLY. NOT FOR BUILD OR DESIGN WITHOUT APPROVAL BY AUTHORIZED REPRESENTATIVE OF TELVENT ENGINEERING.

DATE	DESCRIPTION OF REVISION	NAME

TELVENT
211 E SEVENTH STREET, SUITE 800, AUSTIN, TEXAS 78701

NET RMA
TOLL 49 SEGMENT 3B MAINLANE
SOUTHBOUND POWER WIRING

DATE: 5/10/2012 SHEET 35 OF 47 SHEETS

DESIGNED BY:
DRAWN BY: T. HAMMOND
CHECKED BY:

TELVENT CONFIDENTIAL: THIS DOCUMENT AND THE INFORMATION CONTAINED IN IT ARE CONFIDENTIAL AND CANNOT BE COPIED OR DISCLOSED IN WHOLE OR IN PART WITHOUT THE EXPRESS WRITTEN CONSENT OF **TELVENT, INC.**

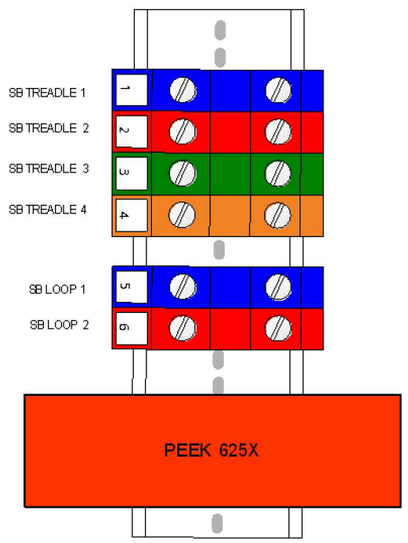

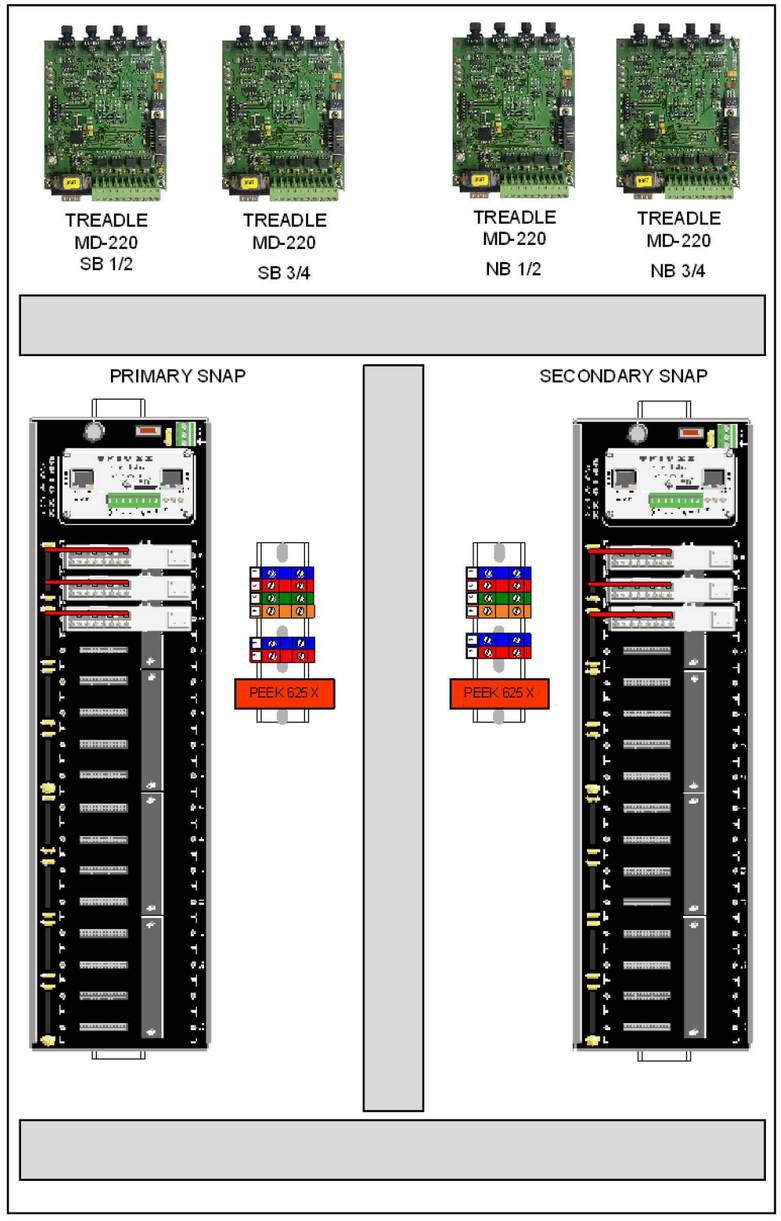

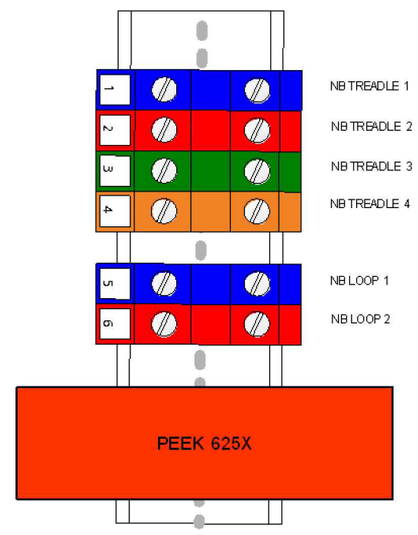

PRELIMINARY / DRAFT

FOR REVIEW ONLY. NOT FOR BUILD OR DESIGN WITHOUT APPROVAL BY AUTHORIZED REPRESENTATIVE OF TELVENT ENGINEERING.

DATE	DESCRIPTION OF REVISION	NAME

TELVENT
211 E SEVENTH STREET, SUITE 800, AUSTIN, TEXAS 78701

NET RMA
TOLL 49 SEGMENT 3B
MAINLANE
SNAP SHELF COMPONENTS

DATE: 5/10/2012 SHEET 37 OF 47 SHEETS

DESIGNED BY:
DRAWN BY: T. HAMMOND
CHECKED BY:

TELVENT CONFIDENTIAL: THIS DOCUMENT AND THE INFORMATION CONTAINED IN IT ARE CONFIDENTIAL AND CANNOT BE COPIED OR DISCLOSED IN WHOLE OR IN PART WITHOUT THE EXPRESS WRITTEN CONSENT OF **TELVENT, INC.**

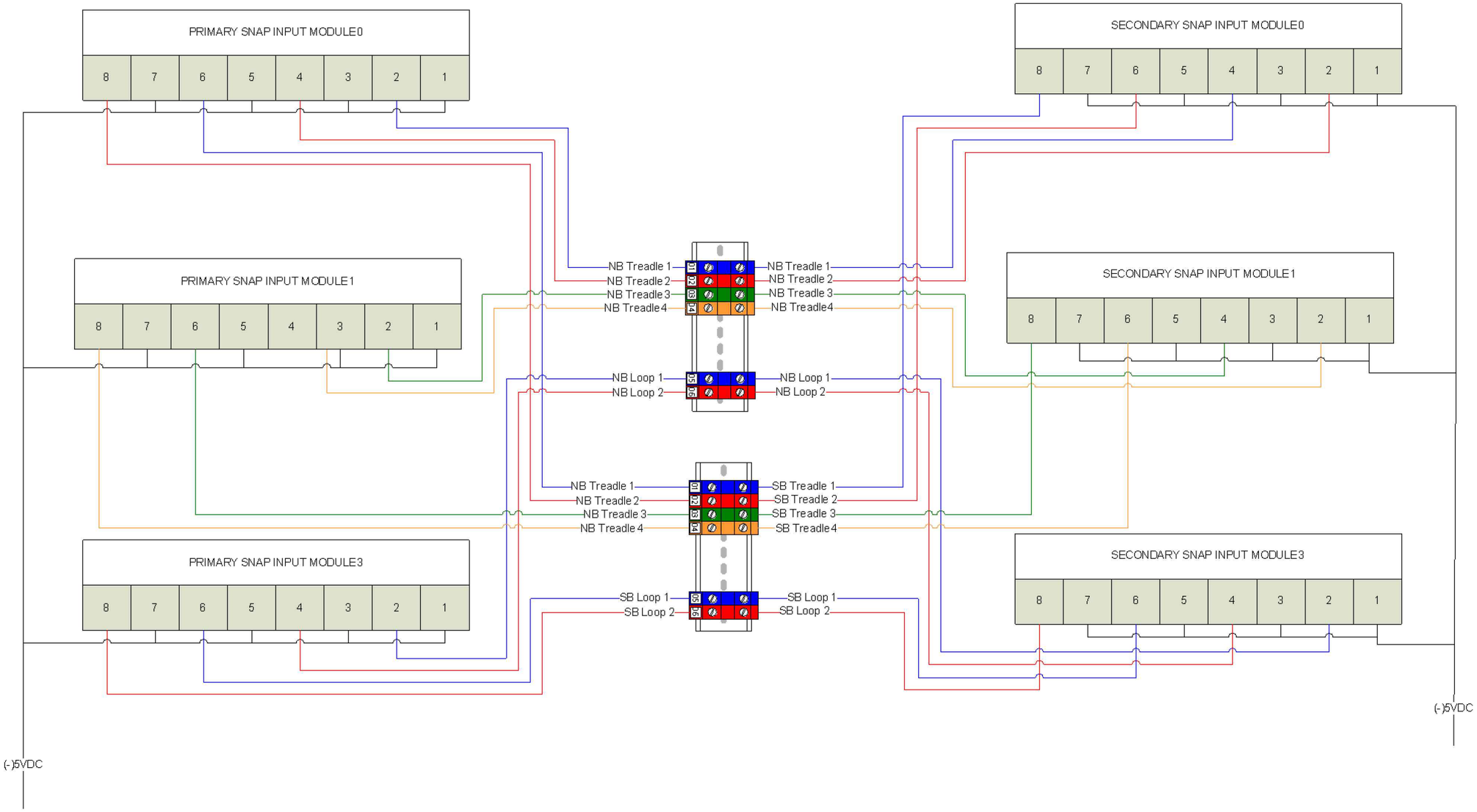

PRELIMINARY / DRAFT

FOR REVIEW ONLY. NOT FOR BUILD OR DESIGN WITHOUT APPROVAL BY AUTHORIZED REPRESENTATIVE OF TELVENT ENGINEERING.

DATE	DESCRIPTION OF REVISION	NAME

TELVENT
211 E SEVENTH STREET, SUITE 800, AUSTIN, TEXAS 78701

NET RMA
TOLL 49 SEGMENT 3B MAINLANE
SNAP INPUT WIRING

DATE: 5/10/2012 SHEET 38 OF 47 SHEETS

DESIGNED BY:
DRAWN BY: T. HAMMOND
CHECKED BY:

TELVENT CONFIDENTIAL: THIS DOCUMENT AND THE INFORMATION CONTAINED IN IT ARE CONFIDENTIAL AND CANNOT BE COPIED OR DISCLOSED IN WHOLE OR IN PART WITHOUT THE EXPRESS WRITTEN CONSENT OF **TELVENT, INC.**

DELETED.

PRELIMINARY / DRAFT

FOR REVIEW ONLY. NOT FOR BUILD OR DESIGN WITHOUT APPROVAL BY AUTHORIZED REPRESENTATIVE OF TELVENT ENGINEERING.

DATE	DESCRIPTION OF REVISION	NAME

TELVENT
211 E SEVENTH STREET, SUITE 800, AUSTIN, TEXAS 78701

NET RMA
TOLL 49 SEGMENT 3B
MAINLANE
SNAP OUTPUT WIRING

DATE: 5/10/2012

DESIGNED BY:
DRAWN BY: T. HAMMOND
CHECKED BY:

TELVENT CONFIDENTIAL: THIS DOCUMENT AND THE INFORMATION CONTAINED IN IT ARE CONFIDENTIAL AND CANNOT BE COPIED OR DISCLOSED IN WHOLE OR IN PART WITHOUT THE EXPRESS WRITTEN CONSENT OF **TELVENT, INC.**

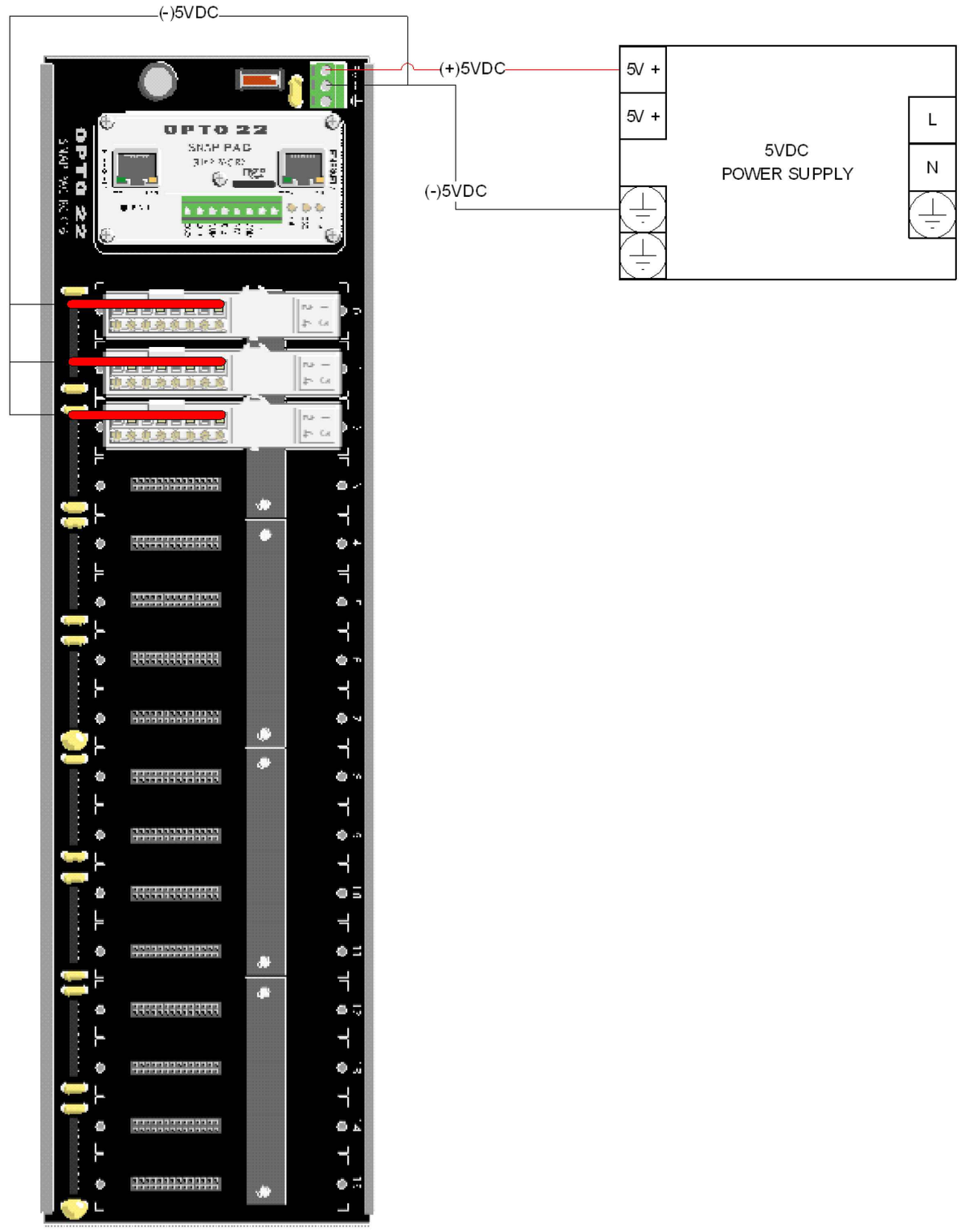

NOTES:

1. THIS IS APPLICABLE TO BOTH THE NORTH BOUND AND SOUND BOUND LANES.

PRELIMINARY / DRAFT

FOR REVIEW ONLY. NOT FOR BUILD OR DESIGN WITHOUT APPROVAL BY AUTHORIZED REPRESENTATIVE OF TELVENT ENGINEERING.

DATE	DESCRIPTION OF REVISION	NAME

TELVENT
211 E SEVENTH STREET, SUITE 800, AUSTIN, TEXAS 78701

NET RMA
TOLL 49 SEGMENT 3B MAINLANE
SNAP POWER WIRING

DATE: 5/10/2012 SHEET 40 OF 47 SHEETS

DESIGNED BY:
DRAWN BY: T. HAMMOND
CHECKED BY:

TELVENT CONFIDENTIAL: THIS DOCUMENT AND THE INFORMATION CONTAINED IN IT ARE CONFIDENTIAL AND CANNOT BE COPIED OR DISCLOSED IN WHOLE OR IN PART WITHOUT THE EXPRESS WRITTEN CONSENT OF **TELVENT, INC.**

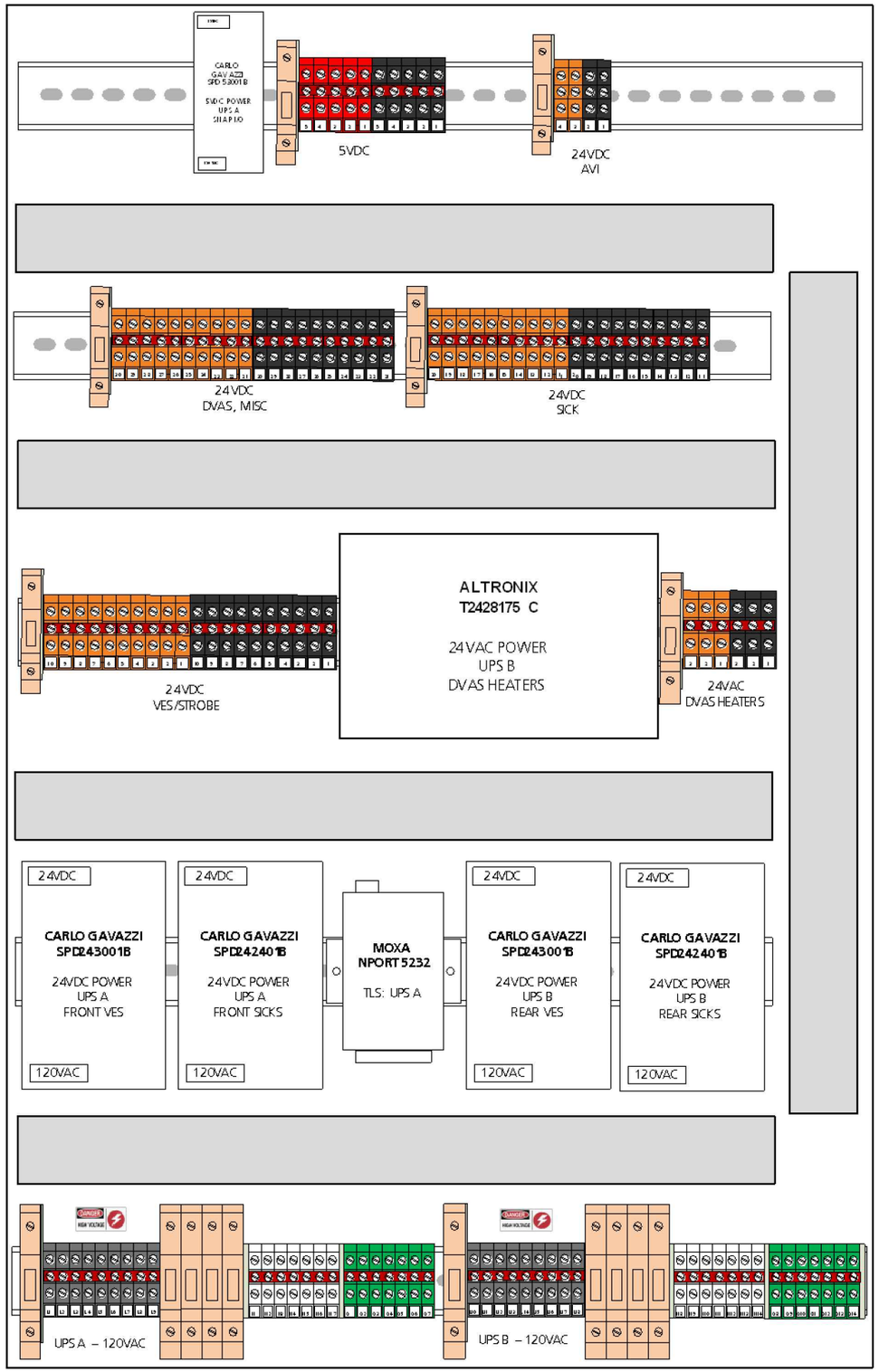

NETRMA RAMP POWER SHELF LAYOUT

PRELIMINARY / DRAFT

FOR REVIEW ONLY. NOT FOR BUILD OR DESIGN WITHOUT APPROVAL BY AUTHORIZED REPRESENTATIVE OF TELVENT ENGINEERING.

DATE	DESCRIPTION OF REVISION	NAME

TELVENT
211 E SEVENTH STREET, SUITE 800, AUSTIN, TEXAS 78701

NET RMA
TOLL 49 SEGMENT 3B RAMP
POWER SHELF COMPONENTS

DATE: 5/10/2012 SHEET 41 OF 47 SHEETS

DESIGNED BY:
DRAWN BY: T. HAMMOND
CHECKED BY:

TELVENT CONFIDENTIAL: THIS DOCUMENT AND THE INFORMATION CONTAINED IN IT ARE CONFIDENTIAL AND CANNOT BE COPIED OR DISCLOSED IN WHOLE OR IN PART WITHOUT THE EXPRESS WRITTEN CONSENT OF **TELVENT, INC.**

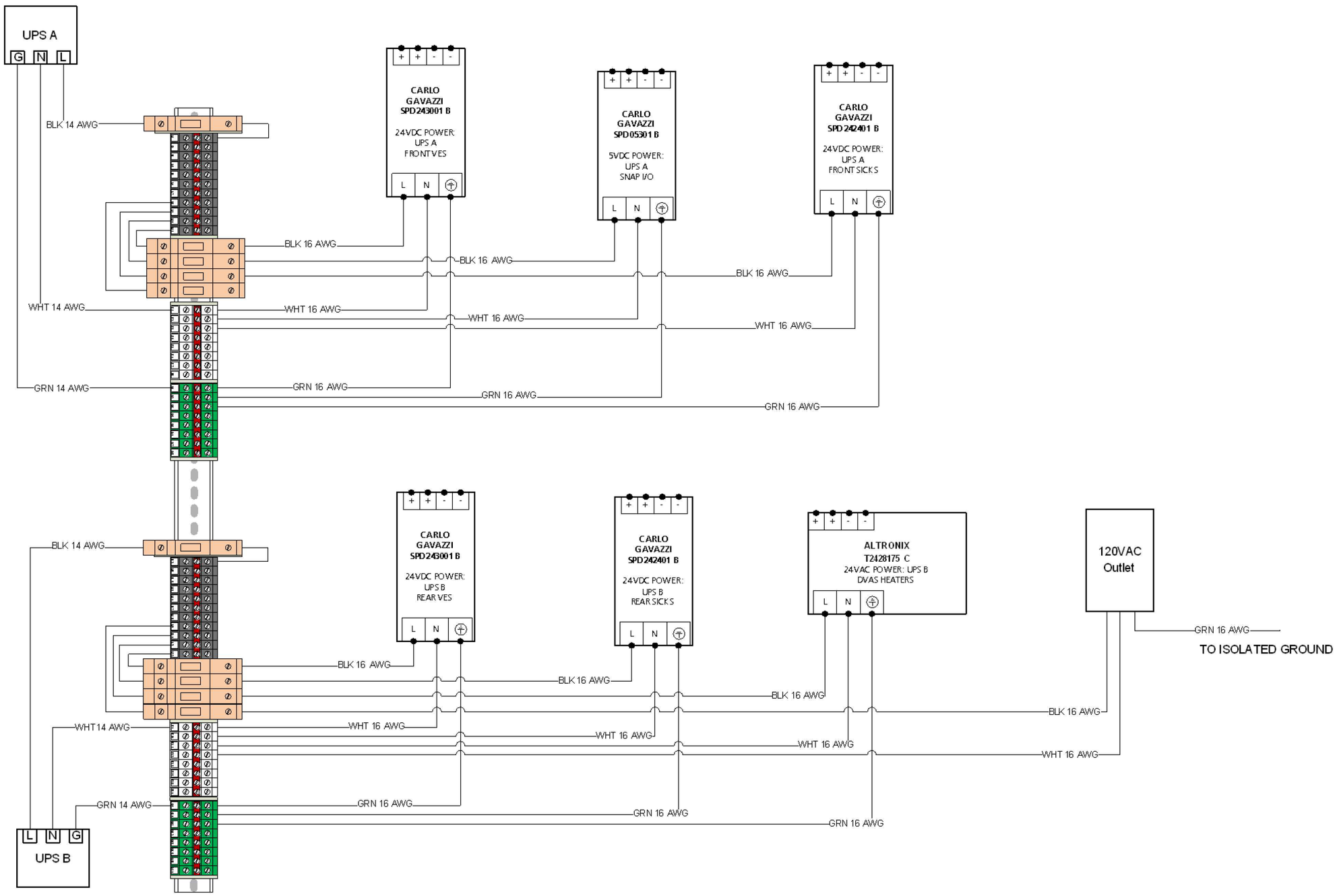

PRELIMINARY / DRAFT

FOR REVIEW ONLY. NOT FOR BUILD OR DESIGN WITHOUT APPROVAL BY AUTHORIZED REPRESENTATIVE OF TELVENT ENGINEERING.

DATE	DESCRIPTION OF REVISION	NAME

TELVENT
211 E SEVENTH STREET, SUITE 800, AUSTIN, TEXAS 78701

NET RMA
TOLL 49 SEGMENT 3B RAMP
POWER WIRING

DATE: 5/10/2012 SHEET 42 OF 47 SHEETS

DESIGNED BY:
DRAWN BY: T. HAMMOND
CHECKED BY:

TELVENT CONFIDENTIAL: THIS DOCUMENT AND THE INFORMATION CONTAINED IN IT ARE CONFIDENTIAL AND CANNOT BE COPIED OR DISCLOSED IN WHOLE OR IN PART WITHOUT THE EXPRESS WRITTEN CONSENT OF **TELVENT, INC.**

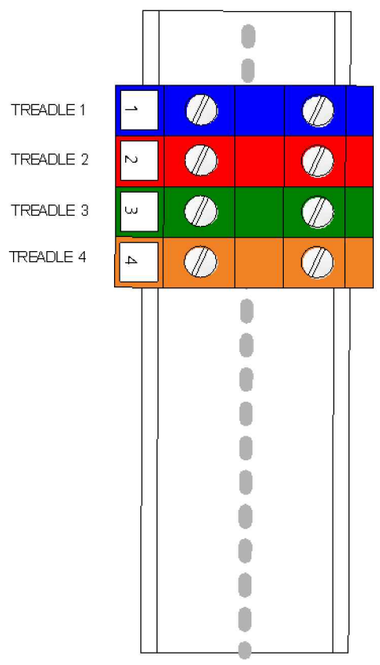

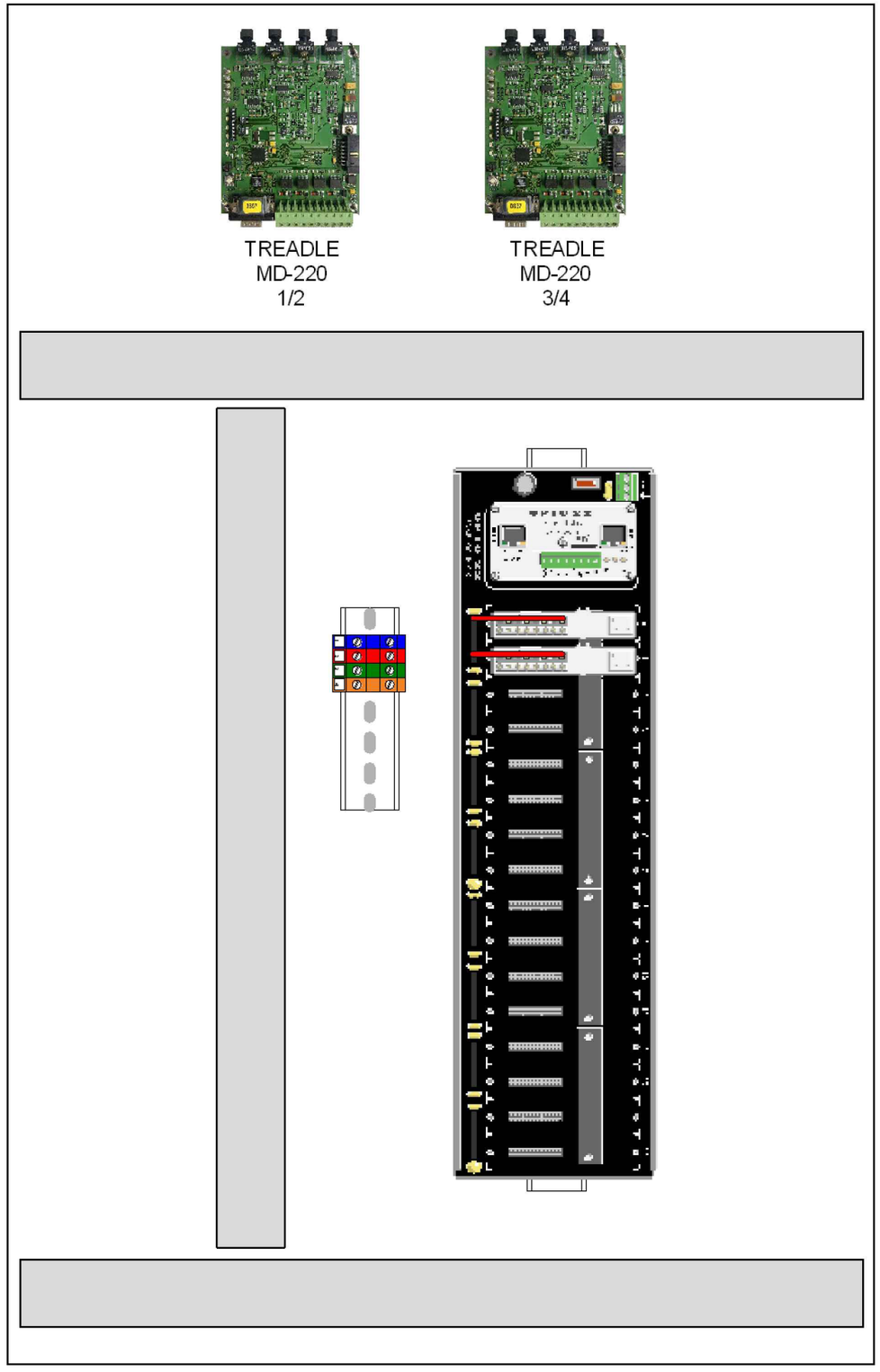

PRELIMINARY / DRAFT

FOR REVIEW ONLY. NOT FOR BUILD OR DESIGN WITHOUT APPROVAL BY AUTHORIZED REPRESENTATIVE OF TELVENT ENGINEERING.

DATE	DESCRIPTION OF REVISION	NAME

TELVENT
211 E SEVENTH STREET, SUITE 800, AUSTIN, TEXAS 78701

NET RMA
TOLL 49 SEGMENT 3B
RAMP
SNAP COMPONENTS

DATE: 5/10/2012

DESIGNED BY:
DRAWN BY: T. HAMMOND
CHECKED BY:

TELVENT CONFIDENTIAL: THIS DOCUMENT AND THE INFORMATION CONTAINED IN IT ARE CONFIDENTIAL AND CANNOT BE COPIED OR DISCLOSED IN WHOLE OR IN PART WITHOUT THE EXPRESS WRITTEN CONSENT OF **TELVENT, INC.**

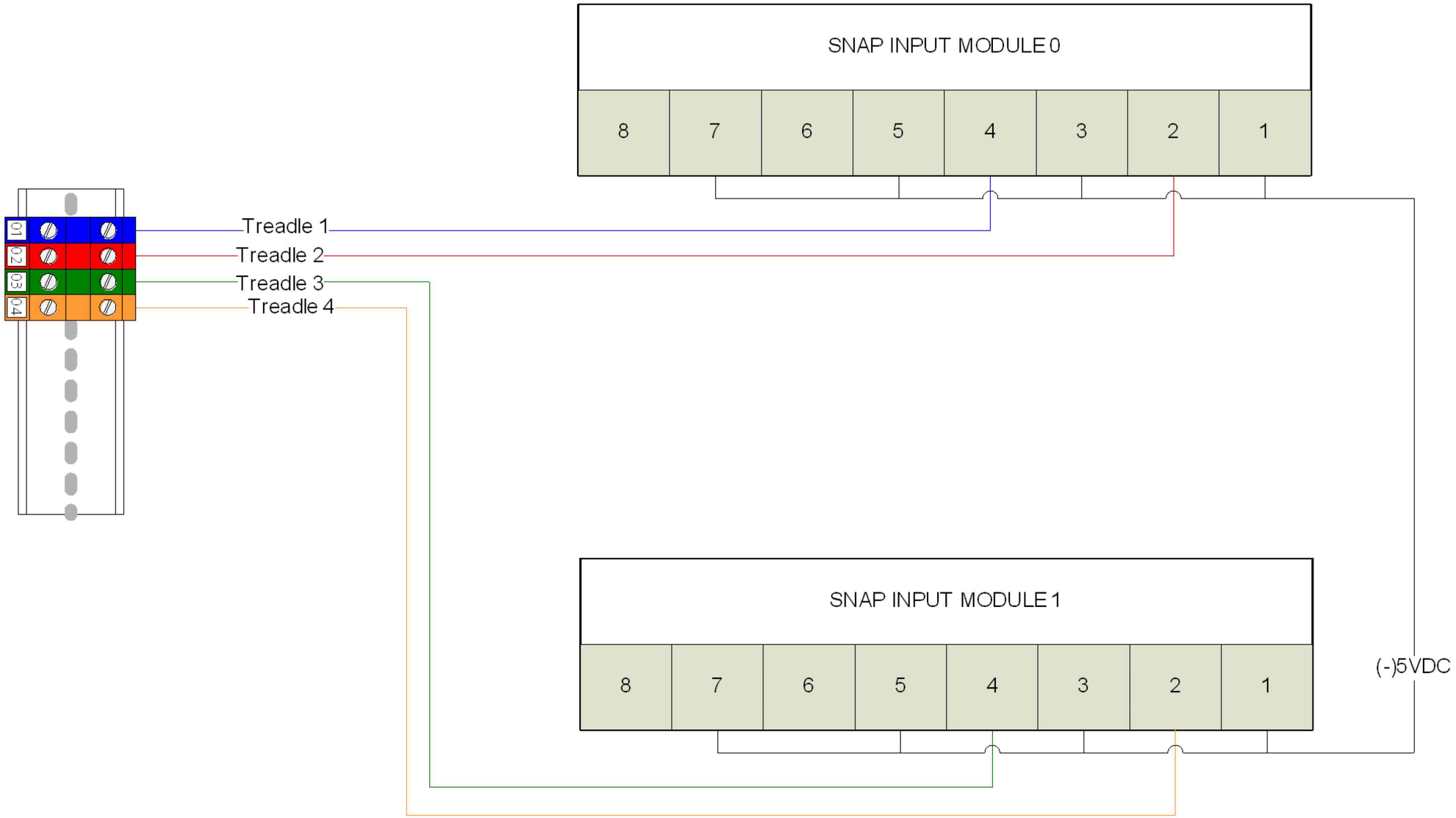

PRELIMINARY / DRAFT

FOR REVIEW ONLY. NOT FOR BUILD OR DESIGN WITHOUT APPROVAL BY AUTHORIZED REPRESENTATIVE OF TELVENT ENGINEERING.

DATE	DESCRIPTION OF REVISION	NAME

TELVENT
211 E SEVENTH STREET, SUITE 800, AUSTIN, TEXAS 78701

NET RMA
TOLL 49 SEGMENT 3B RAMP
SNAP INPUT WIRING

DATE: 5/10/2012

DESIGNED BY:
DRAWN BY: T. HAMMOND
CHECKED BY:

TELVENT CONFIDENTIAL: THIS DOCUMENT AND THE INFORMATION CONTAINED IN IT ARE CONFIDENTIAL AND CANNOT BE COPIED OR DISCLOSED IN WHOLE OR IN PART WITHOUT THE EXPRESS WRITTEN CONSENT OF **TELVENT, INC.**

DELETED.

PRELIMINARY / DRAFT

FOR REVIEW ONLY. NOT FOR BUILD OR DESIGN WITHOUT APPROVAL BY AUTHORIZED REPRESENTATIVE OF TELVENT ENGINEERING.

DATE	DESCRIPTION OF REVISION	NAME

TELVENT
211 E SEVENTH STREET, SUITE 800, AUSTIN, TEXAS 78701

NET RMA
TOLL 49 SEGMENT 3B RAMP
SNAP OUTPUT WIRING

DATE: 5/10/2012

DESIGNED BY:
DRAWN BY: T. HAMMOND
CHECKED BY:

TELVENT CONFIDENTIAL: THIS DOCUMENT AND THE INFORMATION CONTAINED IN IT ARE CONFIDENTIAL AND CANNOT BE COPIED OR DISCLOSED IN WHOLE OR IN PART WITHOUT THE EXPRESS WRITTEN CONSENT OF **TELVENT, INC.**

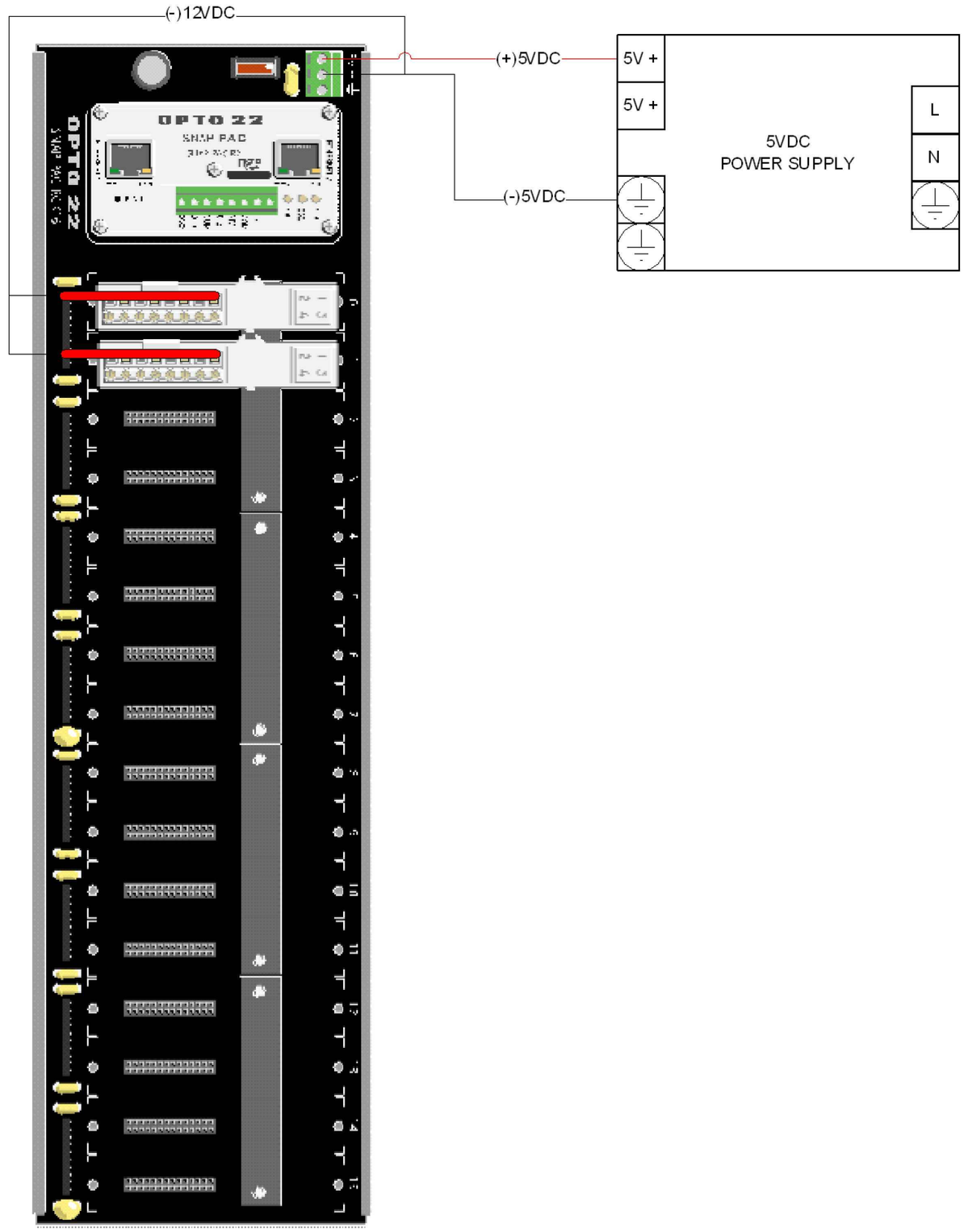

PRELIMINARY / DRAFT

FOR REVIEW ONLY. NOT FOR BUILD OR DESIGN WITHOUT APPROVAL BY AUTHORIZED REPRESENTATIVE OF TELVENT ENGINEERING.

DATE	DESCRIPTION OF REVISION	NAME

TELVENT
211 E SEVENTH STREET, SUITE 800, AUSTIN, TEXAS 78701

NET RMA
TOLL 49 SEGMENT 3B
RAMP
SNAP POWER WIRING

DATE: 5/10/2012 SHEET 46 OF 47 SHEETS

DESIGNED BY:
DRAWN BY: T. HAMMOND
CHECKED BY:

TELVENT CONFIDENTIAL: THIS DOCUMENT AND THE INFORMATION CONTAINED IN IT ARE CONFIDENTIAL AND CANNOT BE COPIED OR DISCLOSED IN WHOLE OR IN PART WITHOUT THE EXPRESS WRITTEN CONSENT OF **TELVENT, INC.**

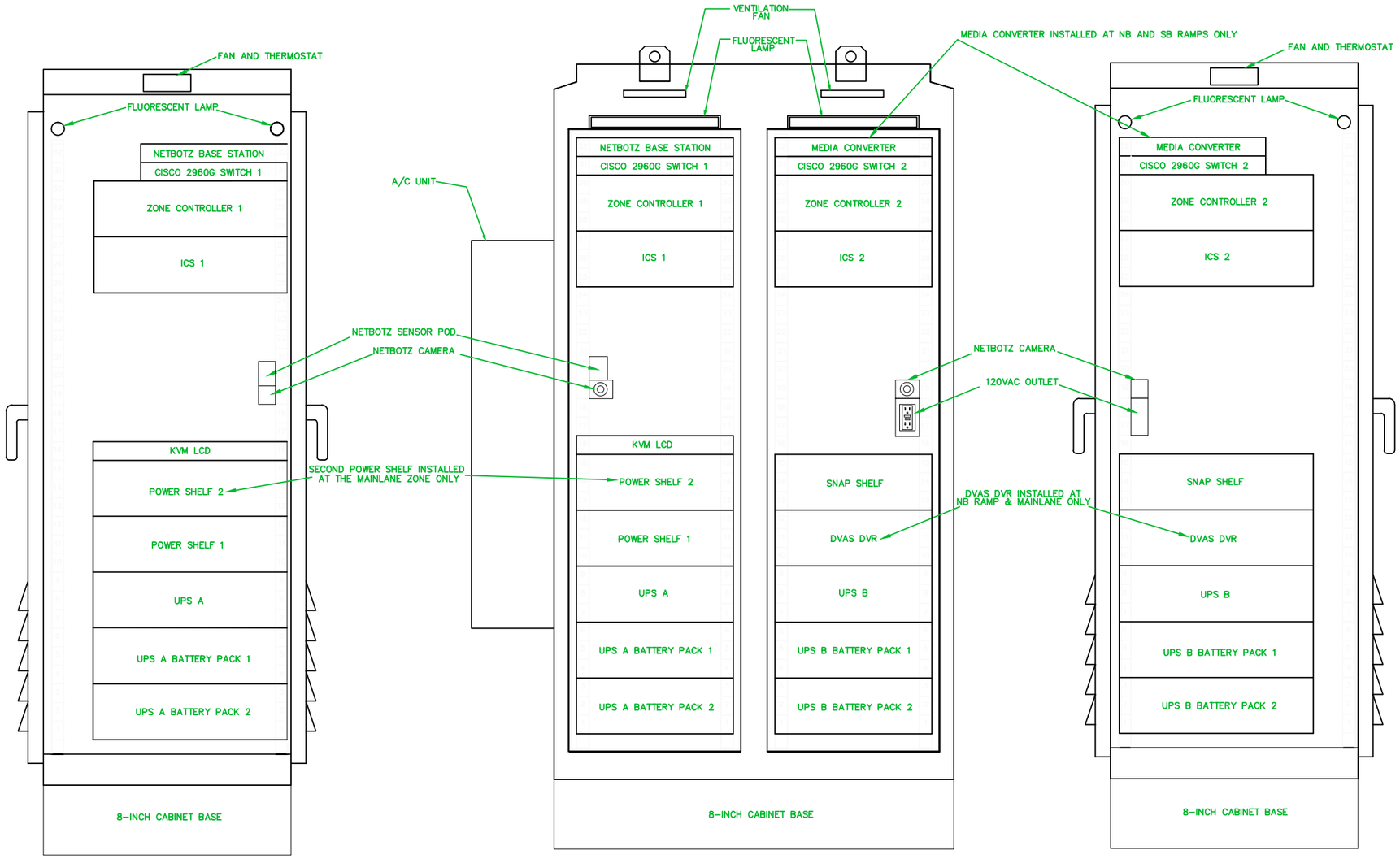

ROADSIDE 334D CABINET ENCLOSURE (LEFT SIDE VIEW)

ROADSIDE 334D CABINET ENCLOSURE (FRONT VIEW)

ROADSIDE 334D CABINET ENCLOSURE (RIGHT SIDE VIEW)

PRELIMINARY / DRAFT

FOR REVIEW ONLY. NOT FOR BUILD OR DESIGN WITHOUT APPROVAL BY AUTHORIZED REPRESENTATIVE OF TELVENT ENGINEERING.

DATE	DESCRIPTION OF REVISION	NAME

TELVENT
211 E SEVENTH STREET, SUITE 800, AUSTIN, TEXAS 78701

NET RMA
TOLL 49, SEGMENT 3B

RACK COMPONENTS

DATE: 5/10/2012 SHEET 47 OF 47 SHEETS

DESIGNED BY:
DRAWN BY: T. HAMMOND
CHECKED BY:

TELVENT CONFIDENTIAL: THIS DOCUMENT AND THE INFORMATION CONTAINED IN IT ARE CONFIDENTIAL AND CANNOT BE COPIED OR DISCLOSED IN WHOLE OR IN PART WITHOUT THE EXPRESS WRITTEN CONSENT OF **TELVENT, INC.**

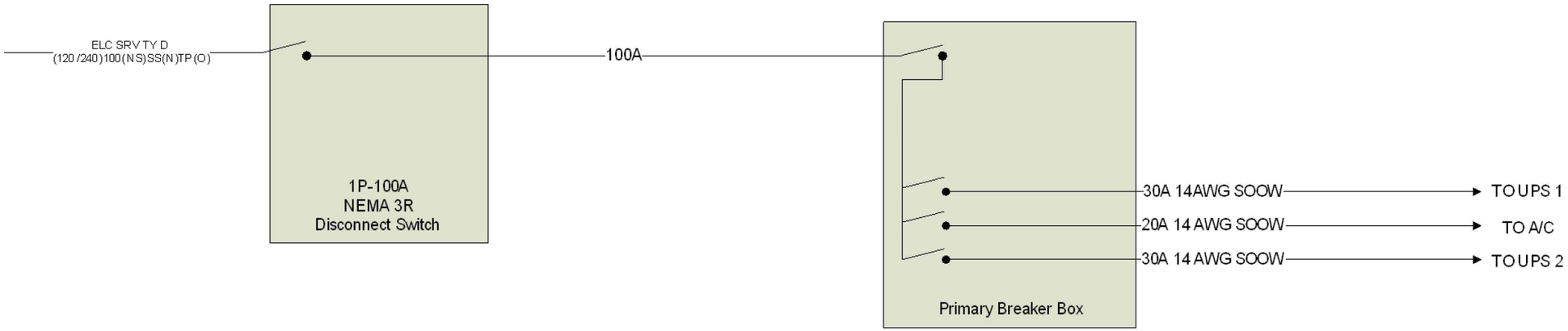

MAINLANE AND SB RAMP POWER SCHEMATIC

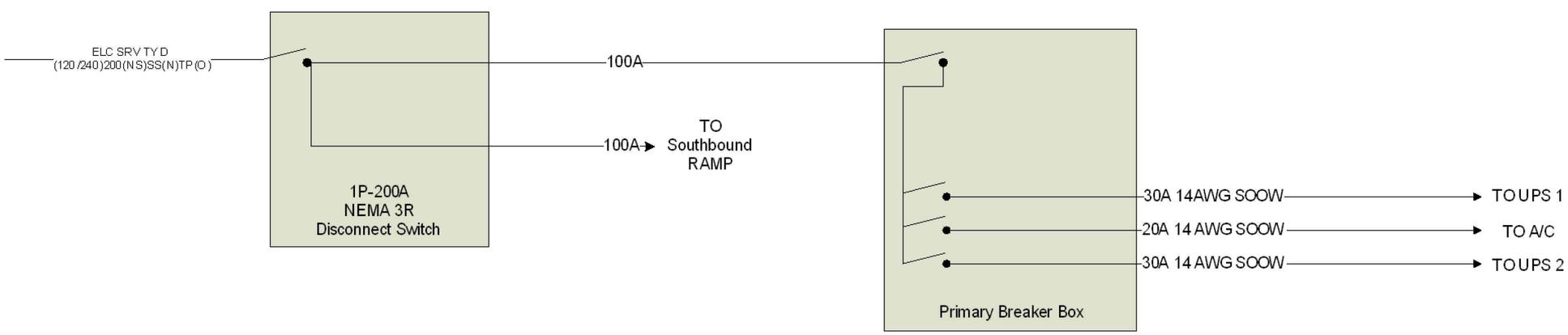

NB RAMP POWER SCHEMATIC

PRELIMINARY / DRAFT

FOR REVIEW ONLY. NOT FOR BUILD OR DESIGN WITHOUT APPROVAL BY AUTHORIZED REPRESENTATIVE OF TELVENT ENGINEERING.

DATE	DESCRIPTION OF REVISION	NAME

TELVENT
211 E SEVENTH STREET, SUITE 800, AUSTIN, TEXAS 78701

NETRMA

TOLL 49, SEGMENT 3B

POWER SCHEMATICS

DATE: 10/24/2012

SHEET 48 OF 48 SHEETS

DESIGNED BY:

DRAWN BY: T. HAMMOND

CHECKED BY:

TELVENT CONFIDENTIAL: THIS DOCUMENT AND THE INFORMATION CONTAINED IN IT ARE CONFIDENTIAL AND CANNOT BE COPIED OR DISCLOSED IN WHOLE OR IN PART WITHOUT THE EXPRESS WRITTEN CONSENT OF **TELVENT, INC.**