Dist	COUNTY	ROUTE	POST MILES TOTAL PROJECT	SHEET No.	TOTAL SHEETS
---	Smith	Toll 49	0.0 / 0.0	1	65

REGISTERED ENGINEER DATE

PLANS APPROVAL DATE

THE STATE OF TEXAS OR ITS OFFICERS OR AGENTS SHALL NOT BE RESPONSIBLE FOR THE ACCURACY OR COMPLETENESS OF SCANNED COPIES OF THIS PLAN SHEET.

Kapsch TrafficCom
211 East 7th Street, Suite 800
Austin, Texas 78701

North East Texas Regional Mobility Auth.
909 ESE Loop 323, Suite 360
Tyler, Texas 75701

Northeast Texas Regional Mobility Authority (NETRMA)
Tolling Design
Toll 49, Segment 4
Kapsch TrafficCom

B I-20 SB RAMP STA 41+15.40
END PROJECT
X=2,913,226.66
Y=6,868,357.07

B US 69 NB EXIT RAMP
STA 103+41.84
BEGIN PROJECT
X=2,916,912.52
Y=6,897,973.51

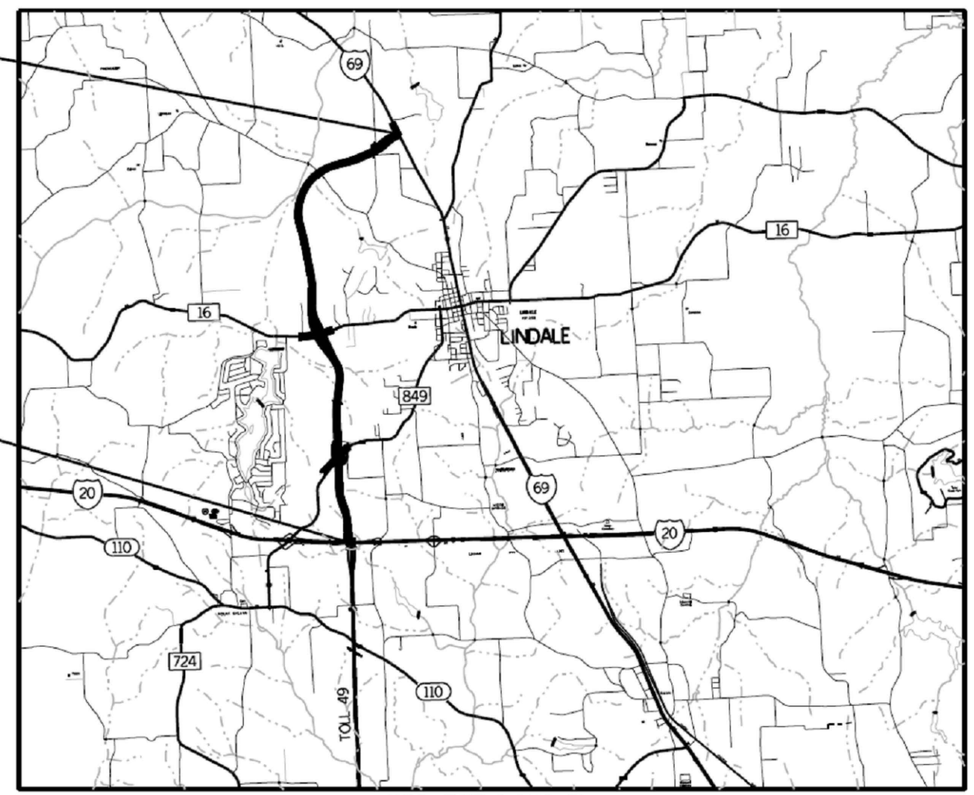

PROJECT LAYOUT
N T S

STATE OF TEXAS - DEPARTMENT OF TRANSPORTATION

CONSULTANT FUNCTIONAL SUPERVISOR ---

CALCULATED-DESIGNED BY T. Hammond

CHECKED BY --

REVISED BY T. Hammond

DATE REVISED 4/10/2017 2:44 PM

DATE/TIME PLOTTED 6/8/2018 11:24 AM

FILENAME NETRMA SEGMENT 4 TOLLING DESIGN.DWG

LAST REVISION 00-00-00

BORDER LAST REVISED 06/08/2018 | RELATIVE BORDER SCALE IS IN INCHES 0 1 2 3 | UNIT --- | PROJECT NUMBER & PHASE --- | SHEET TITLE Cover Page | SHEET NUMBER G-001 | SCALE NTS

Dist	COUNTY	ROUTE	POST MILES TOTAL PROJECT	SHEET No.	TOTAL SHEETS
---	Smith	Toll 49	0.0 / 0.0	2	65

REGISTERED ENGINEER DATE

PLANS APPROVAL DATE

THE STATE OF TEXAS OR ITS OFFICERS OR AGENTS SHALL NOT BE RESPONSIBLE FOR THE ACCURACY OR COMPLETENESS OF SCANNED COPIES OF THIS PLAN SHEET.

Kapsch TrafficCom
211 East 7th Street, Suite 800
Austin, Texas 78701

North East Texas Regional Mobility Auth.
909 ESE Loop 323, Suite 360
Tyler, Texas 75701

SHEET	NAME
GENERAL	
G-001	Cover page
G-002	Index
G-003	General notes
G-004	Construction notes
G-005	Wiring notes
TOLLING LAYOUTS	
TL-001	Mainlane critical dimensions
TL-002	Mainlane zone layout
TL-003	Mainlane toll pad layout
TL-004	Mainlane overhead components' fields of view
TL-005	Mainlane riser details
TL-006	Ramp critical dimensions
TL-007	Ramp zone layout
TL-008	NB ramp toll pad layout
TL-009	SB ramp toll pad layout
TL-010	Ramp overhead components' fields of view
TL-011	Ramp riser details
TL-012	System design matrix
TL-013	Test site layout

SHEET	NAME
POWER & COMMUNICATIONS	
PC-001	Mainlane power block diagram
PC-002	Mainlane network block diagram
PC-003	Mainlane power schematic
PC-004	Ramp power block diagram
PC-005	Ramp network block diagram
PC-006	Ramp power schematic
PC-007	Network device list
PC-008	Network device list
PC-009	VES camera / strobe connection details
PC-010	AVDC scanner connection details
PC-011	DVAS camera connection details
PC-012	AVI antenna connection details
PC-013	AVDC loop connection details
PC-014	AVDC treadle connection details
PC-015	Generator connection details
PC-016	System network diagram
PC-017	System network diagram
PC-018	System network diagram
PC-019	System network diagram
PC-020	NRI-10 rack mount
PC-021	Component panel design
PC-022	Power component panel details
PC-023	I/O component panel details - mainlane
PC-024	I/O component panel details - ramp
PC-025	High voltage connection details - mainlane
PC-026	Low voltage connection details - mainlane
PC-027	High voltage connection details - ramp
PC-028	Low voltage connection details - ramp
PC-029	Cabinet wiring schematic
PC-030	Lightning protection layout (typical)
PC-031	Toll pad layout (with generator)
PC-032	Toll pad layout (without generator)
CABINETS & MOUNTING	
CM-001	Toll cabinet layout
CM-002	Toll cabinet details
CM-003	Overhead equipment elevation details
CM-004	Equipment hanger details
CM-005	VES / DVAS camera bracket details
CM-006	AVDC scanner bracket details
CM-007	JAI PTR mount details
CM-008	VES camera / strobe mounting details
CM-009	AVDC scanner mounting details
CM-010	DVAS camera mounting details
CM-011	AVI antenna mounting details
CM-012	AVI reader mounting details
CM-013	Loop installation details
CM-014	Treadle installation details
CM-015	Generator installation details

STATE OF TEXAS - DEPARTMENT OF TRANSPORTATION

CONSULTANT FUNCTIONAL SUPERVISOR: ---

CALCULATED-DESIGNED BY: T. Hammond

CHECKED BY: --

REVISED BY: T. Hammond

DATE REVISED: 4/10/2017 2:44 PM

DATE/TIME PLOTTED 6/8/2018 11:24 AM

FILENAME NETRMA SEGMENT 4 TOLLING DESIGN.DWG

LAST REVISION 00-00-00

BORDER LAST REVISED 06/08/2018 | RELATIVE BORDER SCALE IS IN INCHES 0 1 2 3 | UNIT --- | PROJECT NUMBER & PHASE --- | SHEET TITLE Index | SHEET NUMBER G-002 | SCALE NTS

Dist	COUNTY	ROUTE	POST MILES TOTAL PROJECT	SHEET No.	TOTAL SHEETS
---	Smith	Toll 49	0.0 / 0.0	3	65

REGISTERED ENGINEER DATE

PLANS APPROVAL DATE

THE STATE OF TEXAS OR ITS OFFICERS OR AGENTS SHALL NOT BE RESPONSIBLE FOR THE ACCURACY OR COMPLETENESS OF SCANNED COPIES OF THIS PLAN SHEET.

Kapsch TrafficCom
211 East 7th Street, Suite 800
Austin, Texas 78701

North East Texas Regional Mobility Auth.
909 ESE Loop 323, Suite 360
Tyler, Texas 75701

This sheet intentionally left blank

STATE OF TEXAS - DEPARTMENT OF TRANSPORTATION			
CONSULTANT FUNCTIONAL SUPERVISOR	---		
CALCULATED-DESIGNED BY	T. Hammond	REVISED BY	T. Hammond
CHECKED BY	---	DATE REVISED	4/10/2017 2:44 PM

DATE/TIME PLOTTED 6/8/2018 11:24 AM

FILENAME NETRMA SEGMENT 4 TOLLING DESIGN.DWG

LAST REVISION 00-00-00

BORDER LAST REVISED 06/08/2018 | RELATIVE BORDER SCALE IS IN INCHES 0 1 2 3 | UNIT --- | PROJECT NUMBER & PHASE --- | SHEET TITLE General Notes | SHEET NUMBER G-003 | SCALE NTS

Dist	COUNTY	ROUTE	POST MILES TOTAL PROJECT	SHEET No.	TOTAL SHEETS
---	Smith	Toll 49	0.0 / 0.0	4	65

REGISTERED ENGINEER DATE

PLANS APPROVAL DATE

THE STATE OF TEXAS OR ITS OFFICERS OR AGENTS SHALL NOT BE RESPONSIBLE FOR THE ACCURACY OR COMPLETENESS OF SCANNED COPIES OF THIS PLAN SHEET.

Kapsch TrafficCom
211 East 7th Street, Suite 800
Austin, Texas 78701

North East Texas Regional Mobility Auth.
909 ESE Loop 323, Suite 360
Tyler, Texas 75701

This sheet intentionally left blank

STATE OF TEXAS - DEPARTMENT OF TRANSPORTATION

CONSULTANT FUNCTIONAL SUPERVISOR	CALCULATED-DESIGNED BY	T. Hammond	REVISED BY	T. Hammond
---	CHECKED BY	---	DATE REVISED	4/10/2017 2:44 PM

DATE/TIME PLOTTED 6/8/2018 11:24 AM

FILENAME NETRMA SEGMENT 4 TOLLING DESIGN.DWG

LAST REVISION 00-00-00

Dist	COUNTY	ROUTE	POST MILES TOTAL PROJECT	SHEET No.	TOTAL SHEETS
---	Smith	Toll 49	0.0 / 0.0	5	65

REGISTERED ENGINEER DATE

PLANS APPROVAL DATE

THE STATE OF TEXAS OR ITS OFFICERS OR AGENTS SHALL NOT BE RESPONSIBLE FOR THE ACCURACY OR COMPLETENESS OF SCANNED COPIES OF THIS PLAN SHEET.

Kapsch TrafficCom
211 East 7th Street, Suite 800
Austin, Texas 78701

North East Texas Regional Mobility Auth.
909 ESE Loop 323, Suite 360
Tyler, Texas 75701

This sheet intentionally left blank

STATE OF TEXAS - DEPARTMENT OF TRANSPORTATION

CONSULTANT FUNCTIONAL SUPERVISOR	CALCULATED-DESIGNED BY	T. Hammond	REVISED BY	T. Hammond
---	CHECKED BY	---	DATE REVISED	4/10/2017 2:44 PM

DATE/TIME PLOTTED 6/8/2018 11:24 AM

FILENAME NETRMA SEGMENT 4 TOLLING DESIGN.DWG

LAST REVISION 00-00-00

BORDER LAST REVISED 06/08/2018 | RELATIVE BORDER SCALE IS IN INCHES 0 1 2 3 | UNIT --- | PROJECT NUMBER & PHASE --- | SHEET TITLE Wiring Notes | SHEET NUMBER G-005 | SCALE NTS

Dist	COUNTY	ROUTE	POST MILES TOTAL PROJECT	SHEET No.	TOTAL SHEETS
---	Smith	Toll 49	0.0 / 0.0	6	65

REGISTERED ENGINEER DATE

PLANS APPROVAL DATE

THE STATE OF TEXAS OR ITS OFFICERS OR AGENTS SHALL NOT BE RESPONSIBLE FOR THE ACCURACY OR COMPLETENESS OF SCANNED COPIES OF THIS PLAN SHEET.

Kapsch TrafficCom
211 East 7th Street, Suite 800
Austin, Texas 78701

North East Texas Regional Mobility Auth.
909 ESE Loop 323, Suite 360
Tyler, Texas 75701

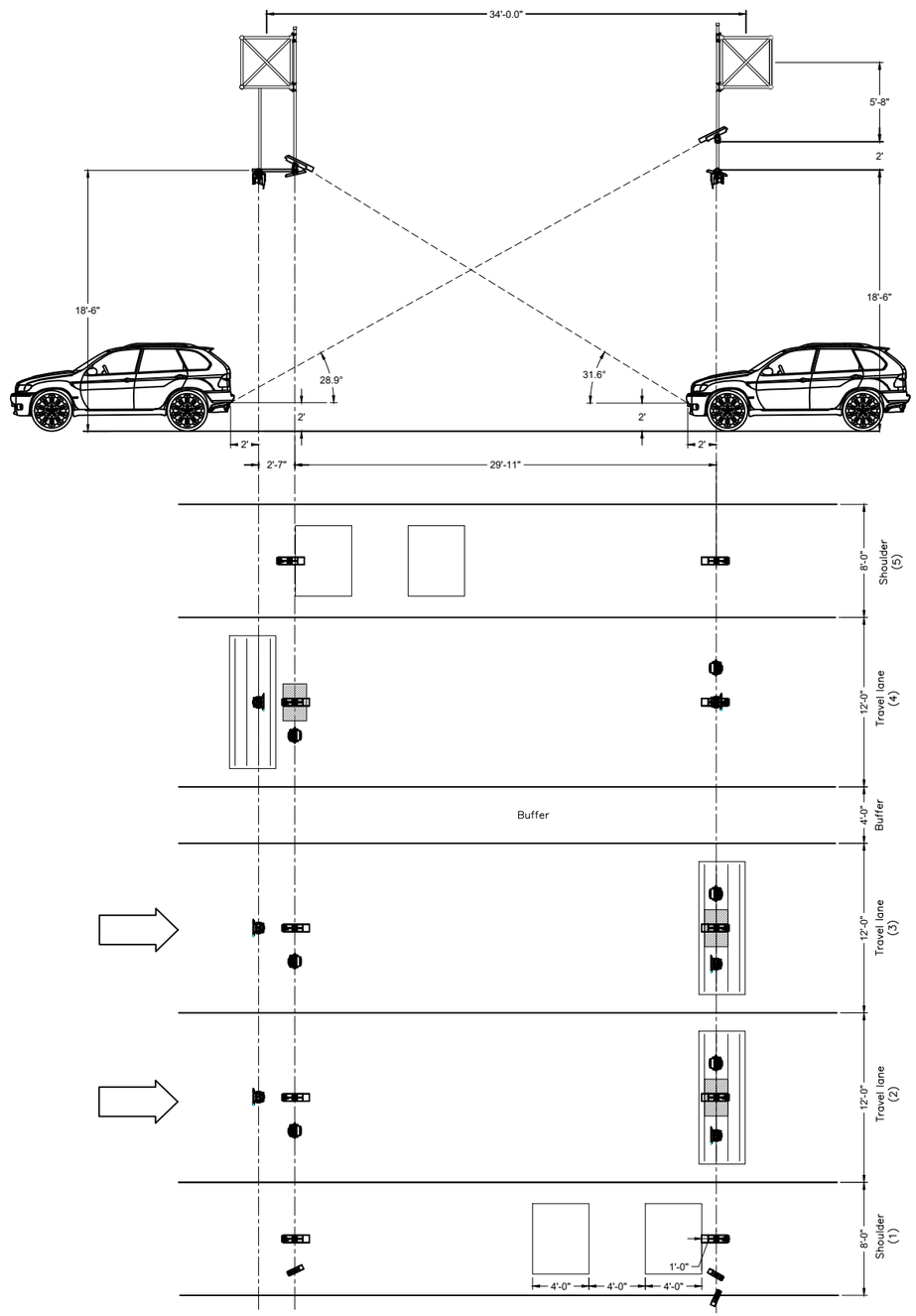

LANE EQUIPMENT CONFIGURATION				
LANE ID	LANE #	LANE WIDTH	ENTRY GANTRY CONFIG	EXIT GANTRY CONFIG
Shoulder	1	8'	A1	A1
Travel lane	2	12'	A5	A3
Travel lane	3	12'	A5	A3
Travel lane	4	12'	A4	A2
Shoulder	5	8'	A1	A1

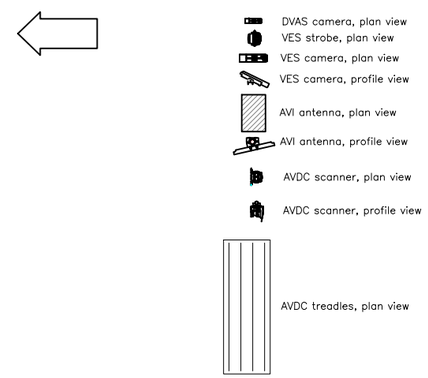

NOTES:

1. See gantry elevation details sheet for proposed equipment location on hangers.
2. Any variation in the critical dimensions shown are to be approved by the toll integrator.
3. Hanger design must account for line of sights of all tolling equipment shown.
4. Hanger design must provide for VES camera angles between 24 and 32 degrees.
5. Distance from the center point of the gantry's diameter to the finished grade of the roadway should be 21'–6".
6. Lane #1 (shoulder) is adjacent to the cabinet.
7. Note that "entry gantry" and "exit gantry" are relative to the direction of travel.

STATE OF TEXAS – DEPARTMENT OF TRANSPORTATION

CONSULTANT FUNCTIONAL SUPERVISOR ---

CALCULATED–DESIGNED BY T. Hammond

CHECKED BY ---

REVISED BY T. Hammond

DATE REVISED 4/10/2017 2:44 PM

DATE/TIME PLOTTED 6/8/2018 11:24 AM

FILENAME NETRMA SEGMENT 4 TOLLING DESIGN.DWG

LAST REVISION 00-00-00

BORDER LAST REVISED 06/08/2018 | RELATIVE BORDER SCALE IS IN INCHES 0 1 2 3 | UNIT --- | PROJECT NUMBER & PHASE --- | SHEET TITLE Mainlane Critical Dimensions | SHEET NUMBER TL-001 | SCALE 3/32" = 1'-0"

Dist	COUNTY	ROUTE	POST MILES TOTAL PROJECT	SHEET No.	TOTAL SHEETS
---	Smith	Toll 49	0.0 / 0.0	7	65

REGISTERED ENGINEER DATE

PLANS APPROVAL DATE

THE STATE OF TEXAS OR ITS OFFICERS OR AGENTS SHALL NOT BE RESPONSIBLE FOR THE ACCURACY OR COMPLETENESS OF SCANNED COPIES OF THIS PLAN SHEET.

Kapsch TrafficCom
211 East 7th Street, Suite 800
Austin, Texas 78701

North East Texas Regional Mobility Auth.
909 ESE Loop 323, Suite 360
Tyler, Texas 75701

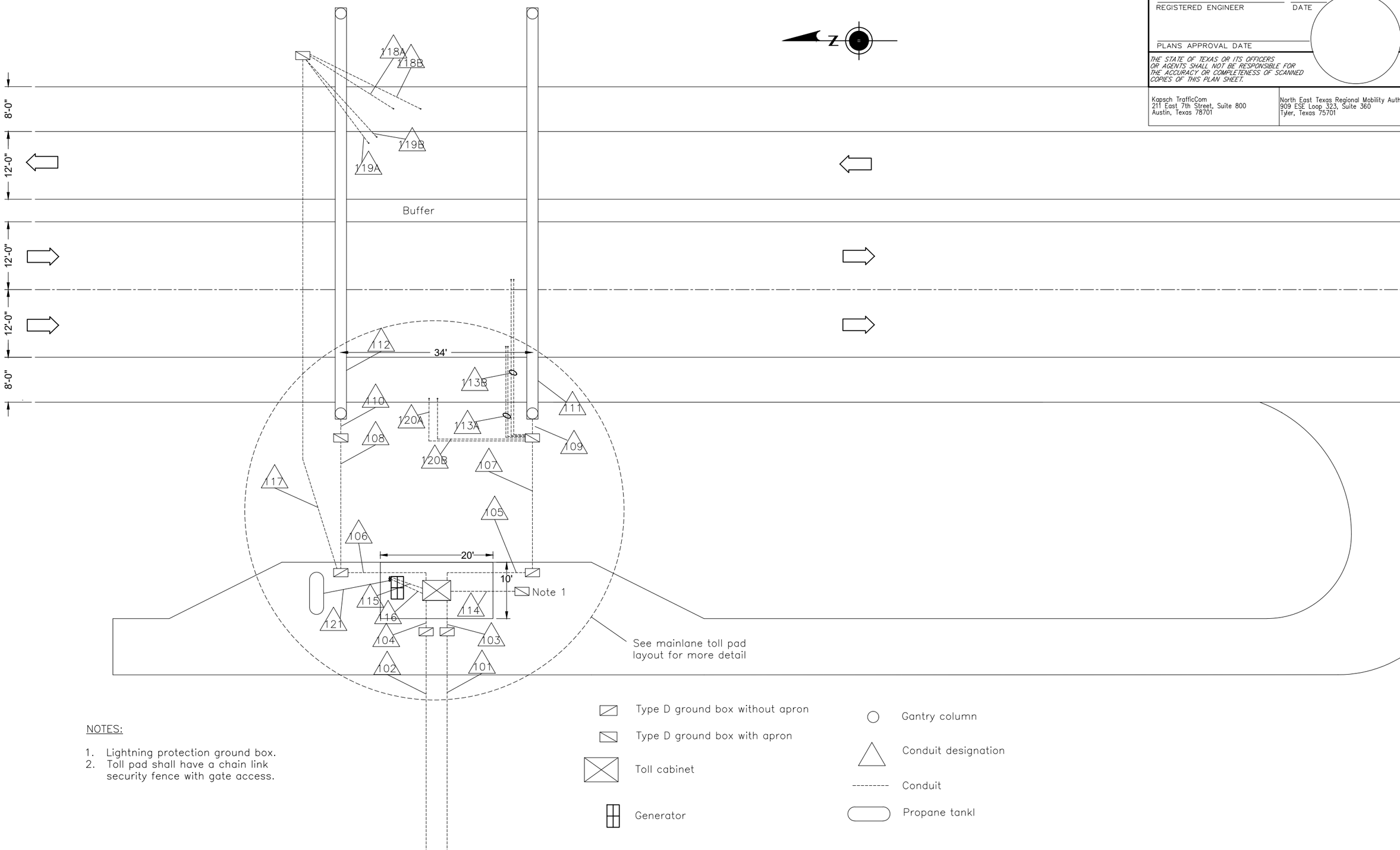

NOTES:

1. Lightning protection ground box.
2. Toll pad shall have a chain link security fence with gate access.

STATE OF TEXAS – DEPARTMENT OF TRANSPORTATION

CONSULTANT FUNCTIONAL SUPERVISOR ---

CALCULATED–DESIGNED BY T. Hammond

CHECKED BY --

REVISED BY T. Hammond

DATE REVISED 4/10/2017 2:44 PM

DATE/TIME PLOTTED 6/8/2018 11:24 AM

FILENAME NETRMA SEGMENT 4 TOLLING DESIGN.DWG

LAST REVISION 00-00-00

BORDER LAST REVISED 06/08/2018 | RELATIVE BORDER SCALE IS IN INCHES 0 1 2 3 | UNIT --- | PROJECT NUMBER & PHASE --- | SHEET TITLE Mainlane Zone Layout | SHEET NUMBER TL-002 | SCALE 1/16" = 1'-0"

Dist	COUNTY	ROUTE	POST MILES TOTAL PROJECT	SHEET No.	TOTAL SHEETS
---	Smith	Toll 49	0.0 / 0.0	8	65

REGISTERED ENGINEER DATE

PLANS APPROVAL DATE

THE STATE OF TEXAS OR ITS OFFICERS OR AGENTS SHALL NOT BE RESPONSIBLE FOR THE ACCURACY OR COMPLETENESS OF SCANNED COPIES OF THIS PLAN SHEET.

Kapsch TrafficCom
211 East 7th Street, Suite 800
Austin, Texas 78701

North East Texas Regional Mobility Auth.
909 ESE Loop 323, Suite 360
Tyler, Texas 75701

Type D ground box without apron

Type D ground box with apron

Toll cabinet

Gantry column

Conduit designation

Conduit

NOTES:

1. Lightning protection ground box.

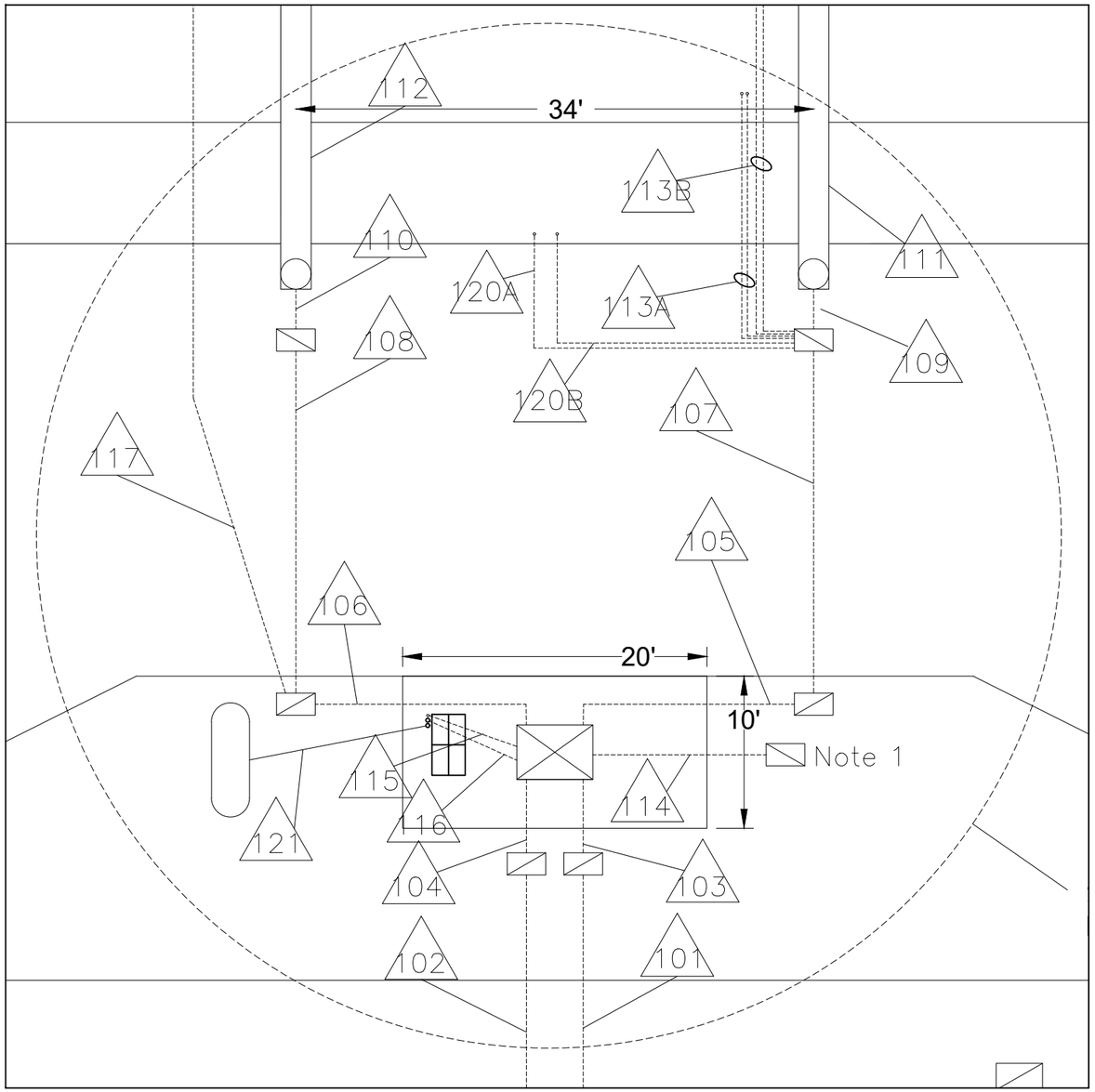

COMPONENT WEIGHTS		
ITEM #	COMPONENT	WEIGHT (lbs.)
1	Dual bay cabinet	750.0
2	Electronics	1000.0
3	Generator	2000.0
	TOTAL	3750.0

CONDUIT SCHEDULE			
RUN #	CONDUIT FUNCTION	CONDUIT QUANTITY	CONDUIT SIZE
101	Incoming communications	1	2"
102	Incoming power	1	3"
103	Incoming communications	1	2"
104	Incoming power	1	3"
105	DC power/comm to exit gantry	2	3"
106	DC power/comm to entry gantry	2	3"
107	DC power/comm to exit gantry	2	3"
108	DC power comm to entry gantry	2	3"
109	DC power/comm to exit gantry	2	3"
110	DC power/comm to entry gantry	2	3"
111	Exit gantry	2	3"
112	Entry gantry	2	3"
113A	To treadle stub ups	2	2"
113B	To treadle stub ups	2	2"
114	Lightning protection grounding	1	2"
115	Comm to/from generator	1	2"
116	Power from generator	1	3"
117	Opposite direction loops/treadles	2	3"
118A	To shoulder loop	1	2"
118B	To shoulder loop	1	2"
119A	To treadle stub ups	1	2"
119B	To treadle stub ups	1	2"
120A	To shoulder loop	1	2"
120B	To shoulder loop	1	2"
121	Propane conduit sleeve	1	3"

STATE OF TEXAS - DEPARTMENT OF TRANSPORTATION

CONSULTANT FUNCTIONAL SUPERVISOR ---

CALCULATED-DESIGNED BY T. Hammond

CHECKED BY --

REVISED BY T. Hammond

DATE REVISED 4/10/2017 2:44 PM

DATE/TIME PLOTTED 6/8/2018 11:24 AM

FILENAME NETRMA SEGMENT 4 TOLLING DESIGN.DWG

LAST REVISION 00-00-00

BORDER LAST REVISED 06/08/2018 | RELATIVE BORDER SCALE IS IN INCHES 0 1 2 3 | UNIT --- | PROJECT NUMBER & PHASE --- | SHEET TITLE Mainlane Toll Pad Layout | SHEET NUMBER TL-003 | SCALE NTS

Dist	COUNTY	ROUTE	POST MILES TOTAL PROJECT	SHEET No.	TOTAL SHEETS
---	Smith	Toll 49	0.0 / 0.0	9	65

REGISTERED ENGINEER DATE

PLANS APPROVAL DATE

THE STATE OF TEXAS OR ITS OFFICERS OR AGENTS SHALL NOT BE RESPONSIBLE FOR THE ACCURACY OR COMPLETENESS OF SCANNED COPIES OF THIS PLAN SHEET.

Kapsch TrafficCom
211 East 7th Street, Suite 800
Austin, Texas 78701

North East Texas Regional Mobility Auth.
909 ESE Loop 323, Suite 360
Tyler, Texas 75701

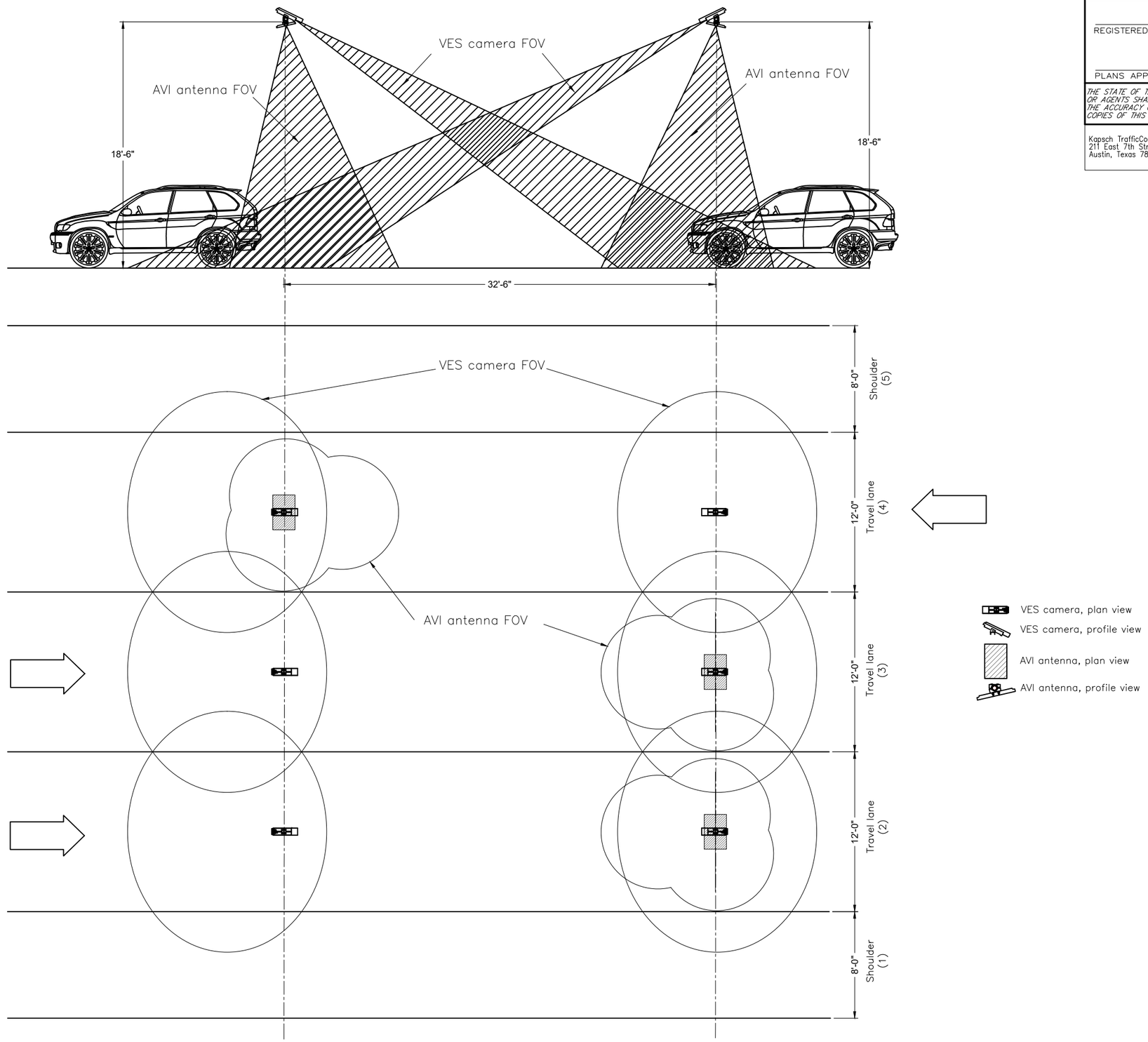

STATE OF TEXAS - DEPARTMENT OF TRANSPORTATION	CONSULTANT FUNCTIONAL SUPERVISOR	---
	CALCULATED-DESIGNED BY	T. Hammond
	CHECKED BY	--
	REVISED BY	T. Hammond
	DATE REVISED	4/10/2017 2:44 PM

DATE/TIME PLOTTED 6/8/2018 11:24 AM

FILENAME NETRMA SEGMENT 4 TOLLING DESIGN.DWG

LAST REVISION 00-00-00

BORDER LAST REVISED 06/08/2018 | RELATIVE BORDER SCALE IS IN INCHES 0 1 2 3 | UNIT --- | PROJECT NUMBER & PHASE --- | SHEET TITLE Mainlane Overhead Components' Fields Of View | SHEET NUMBER TL-004 | SCALE 1/8" = 1'-0"

Dist	COUNTY	ROUTE	POST MILES TOTAL PROJECT	SHEET No.	TOTAL SHEETS
---	Smith	Toll 49	0.0 / 0.0	10	65

REGISTERED ENGINEER DATE

PLANS APPROVAL DATE

THE STATE OF TEXAS OR ITS OFFICERS OR AGENTS SHALL NOT BE RESPONSIBLE FOR THE ACCURACY OR COMPLETENESS OF SCANNED COPIES OF THIS PLAN SHEET.

Kapsch TrafficCom
211 East 7th Street, Suite 800
Austin, Texas 78701

North East Texas Regional Mobility Auth.
909 ESE Loop 323, Suite 360
Tyler, Texas 75701

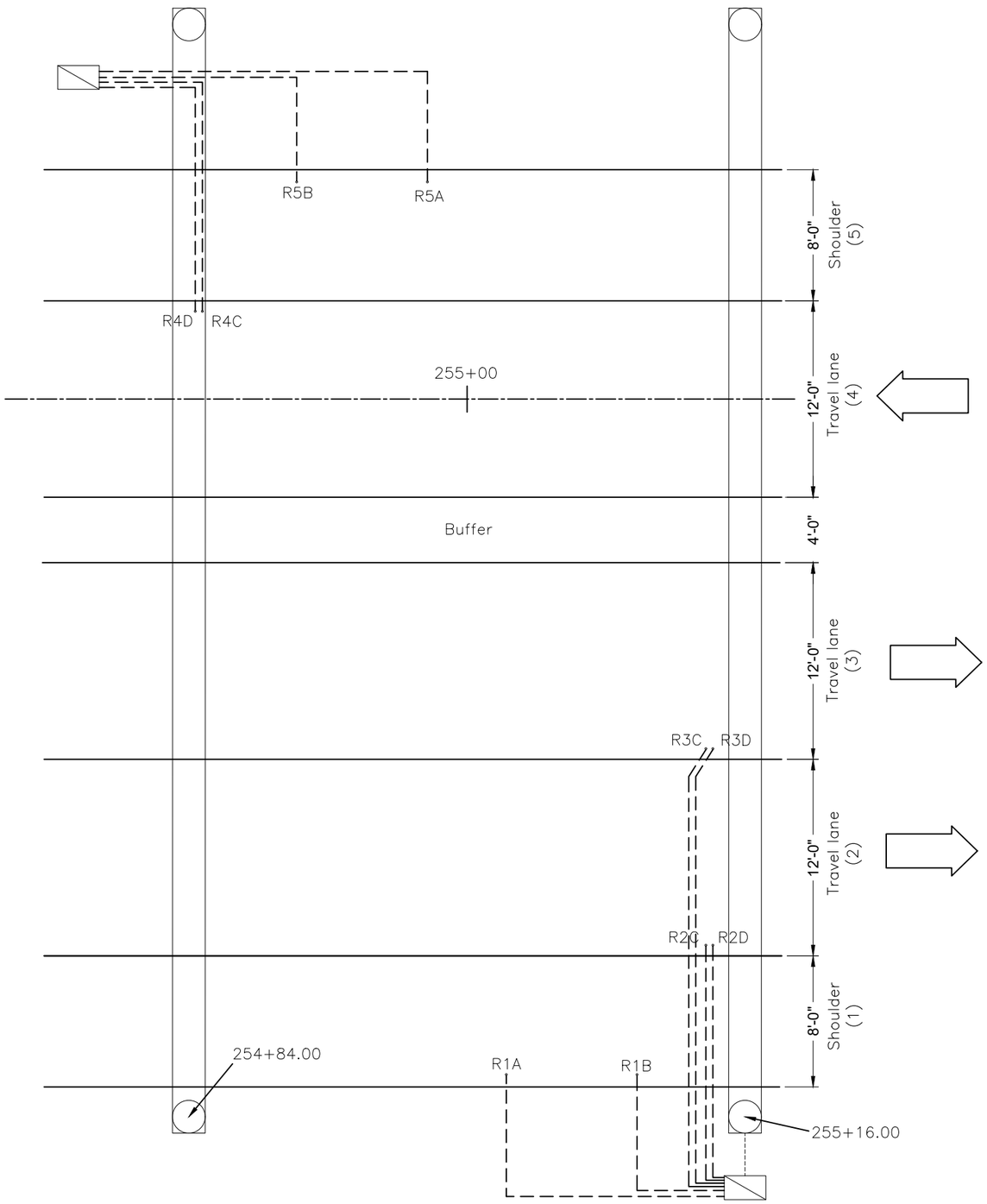

MAINLANE RISER LOCATIONS						
LANE ID	LANE #	RISER A STATION	RISER B STATION	RISER C STATION	RISER D STATION	OFFSET
Shoulder	1	255+2.40	255+10.40	n/a	n/a	41.32 RT
Travel lane	2	n/a	n/a	255+14.62	255+15.04	33.41 RT
Travel l ane	3	n/a	n/a	255+14.62	255+15.04	21.39 RT
Travel lane	4	n/a	n/a	254+83.80	254+83.37	5.36 LT
Shoulder	5	254+97.58	254+89.58	n/a	n/a	13.27 LT

NOTES:

1. Toll cabinet is adjacent to lane 1.
2. All riser conduits terminate in the ground boxes.
3. All riser conduit is 1-¼" schedule 40/80 pvc.
4. See conduit schedule for conduit details.
5. Toll integrator will verify all stub up locations prior to pouring of concrete.

· Riser / Stub up

Ground box

--- Conduit

STATE OF TEXAS - DEPARTMENT OF TRANSPORTATION

CONSULTANT FUNCTIONAL SUPERVISOR: ---

CALCULATED-DESIGNED BY: T. Hammond — CHECKED BY: --

REVISED BY: T. Hammond — DATE REVISED: 4/10/2017 2:44 PM

DATE/TIME PLOTTED 6/8/2018 11:24 AM

FILENAME NETRMA SEGMENT 4 TOLLING DESIGN.DWG

LAST REVISION 00-00-00

BORDER LAST REVISED 06/08/2018 | RELATIVE BORDER SCALE IS IN INCHES 0 1 2 3 | UNIT --- | PROJECT NUMBER & PHASE --- | SHEET TITLE Mainlane Riser Details | SHEET NUMBER TL-005 | SCALE 1/8" = 1'-0"

Dist	COUNTY	ROUTE	POST MILES TOTAL PROJECT	SHEET No.	TOTAL SHEETS
---	Smith	Toll 49	0.0 / 0.0	11	65

REGISTERED ENGINEER DATE

PLANS APPROVAL DATE

THE STATE OF TEXAS OR ITS OFFICERS OR AGENTS SHALL NOT BE RESPONSIBLE FOR THE ACCURACY OR COMPLETENESS OF SCANNED COPIES OF THIS PLAN SHEET.

Kapsch TrafficCom
211 East 7th Street, Suite 800
Austin, Texas 78701

North East Texas Regional Mobility Auth.
909 ESE Loop 323, Suite 360
Tyler, Texas 75701

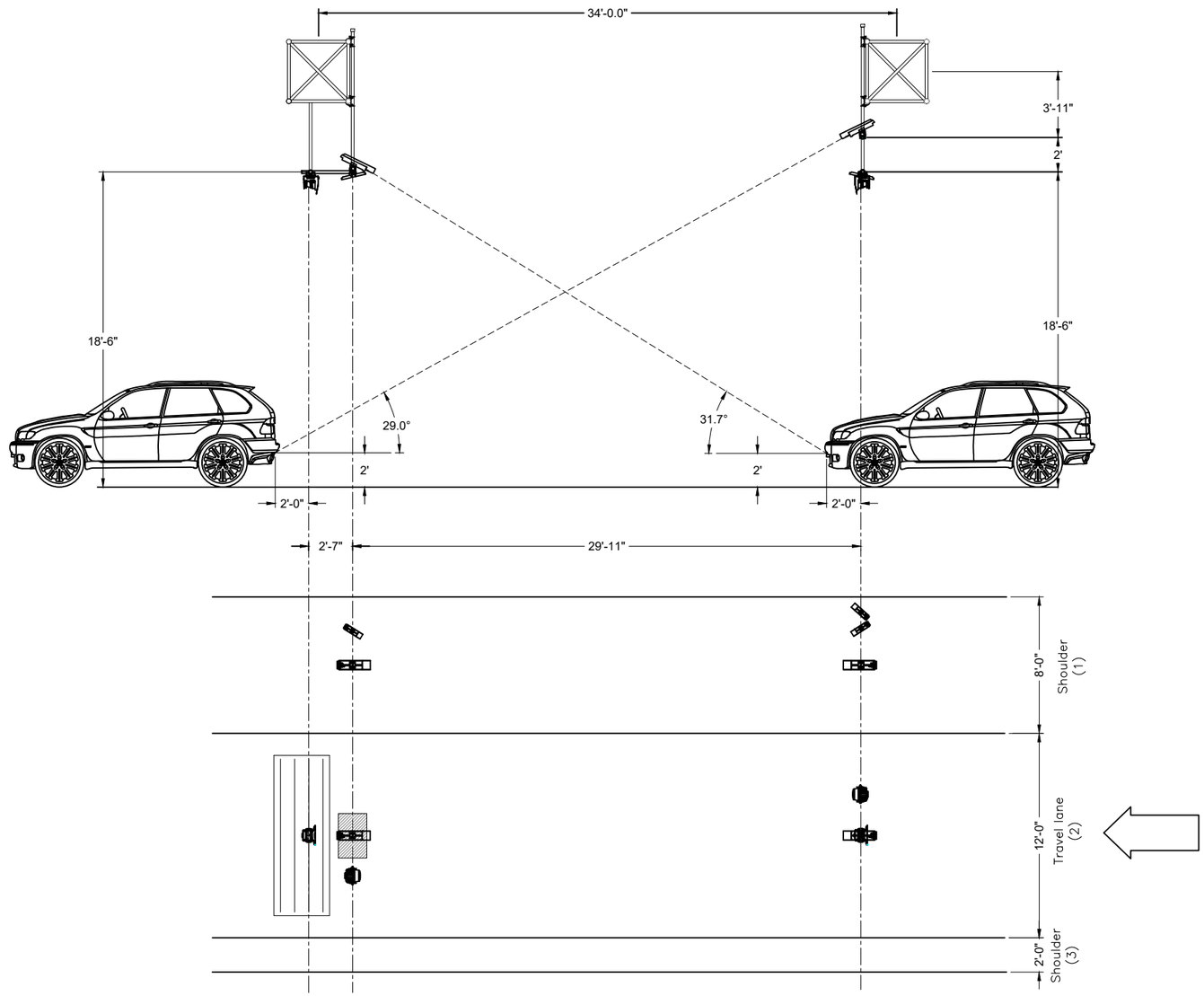

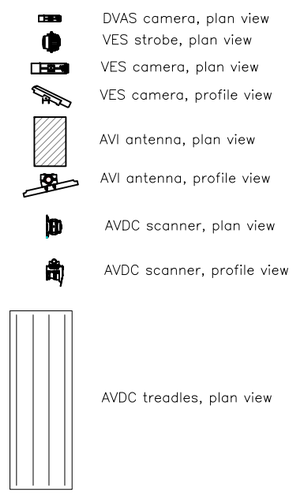

LANE EQUIPMENT CONFIGURATION				
LANE ID	LANE #	LANE WIDTH	ENTRY GANTRY CONFIG	EXIT GANTRY CONFIG
Shoulder	1	8'	A1	A1
Travel lane	2	12'	A4	A2
Shoulder	3	2'	A1	A1

NOTES:

1. See gantry elevation details sheet for proposed equipment location on hangers.
2. Any variation in the critical dimensions shown are to be approved by the toll integrator.
3. Hanger design must account for line of sights of all tolling equipment shown.
4. Hanger design must provide for VES camera angles between 24 and 32 degrees.
5. Distance from the center point of the gantry's diameter to the finished grade of the roadway should be 21'-6".
6. Lane #1 (shoulder) is adjacent to the cabinet.

REVISED BY	T. Hammond
DATE REVISED	4/10/2017 2:44 PM
CALCULATED-DESIGNED BY	T. Hammond
CHECKED BY	--
CONSULTANT FUNCTIONAL SUPERVISOR	---

STATE OF TEXAS - DEPARTMENT OF TRANSPORTATION

DATE/TIME PLOTTED 6/8/2018 11:24 AM

FILENAME NETRMA SEGMENT 4 TOLLING DESIGN.DWG

LAST REVISION 00-00-00

BORDER LAST REVISED 06/08/2018 | RELATIVE BORDER SCALE IS IN INCHES 0 1 2 3 | UNIT --- | PROJECT NUMBER & PHASE --- | SHEET TITLE Ramp Critical Dimensions | SHEET NUMBER TL-006 | SCALE 1/8" = 1'-0"

Dist	COUNTY	ROUTE	POST MILES TOTAL PROJECT	SHEET No.	TOTAL SHEETS
---	Smith	Toll 49	0.0 / 0.0	12	65

REGISTERED ENGINEER DATE

PLANS APPROVAL DATE

THE STATE OF TEXAS OR ITS OFFICERS OR AGENTS SHALL NOT BE RESPONSIBLE FOR THE ACCURACY OR COMPLETENESS OF SCANNED COPIES OF THIS PLAN SHEET.

Kapsch TrafficCom
211 East 7th Street, Suite 800
Austin, Texas 78701

North East Texas Regional Mobility Auth.
909 ESE Loop 323, Suite 360
Tyler, Texas 75701

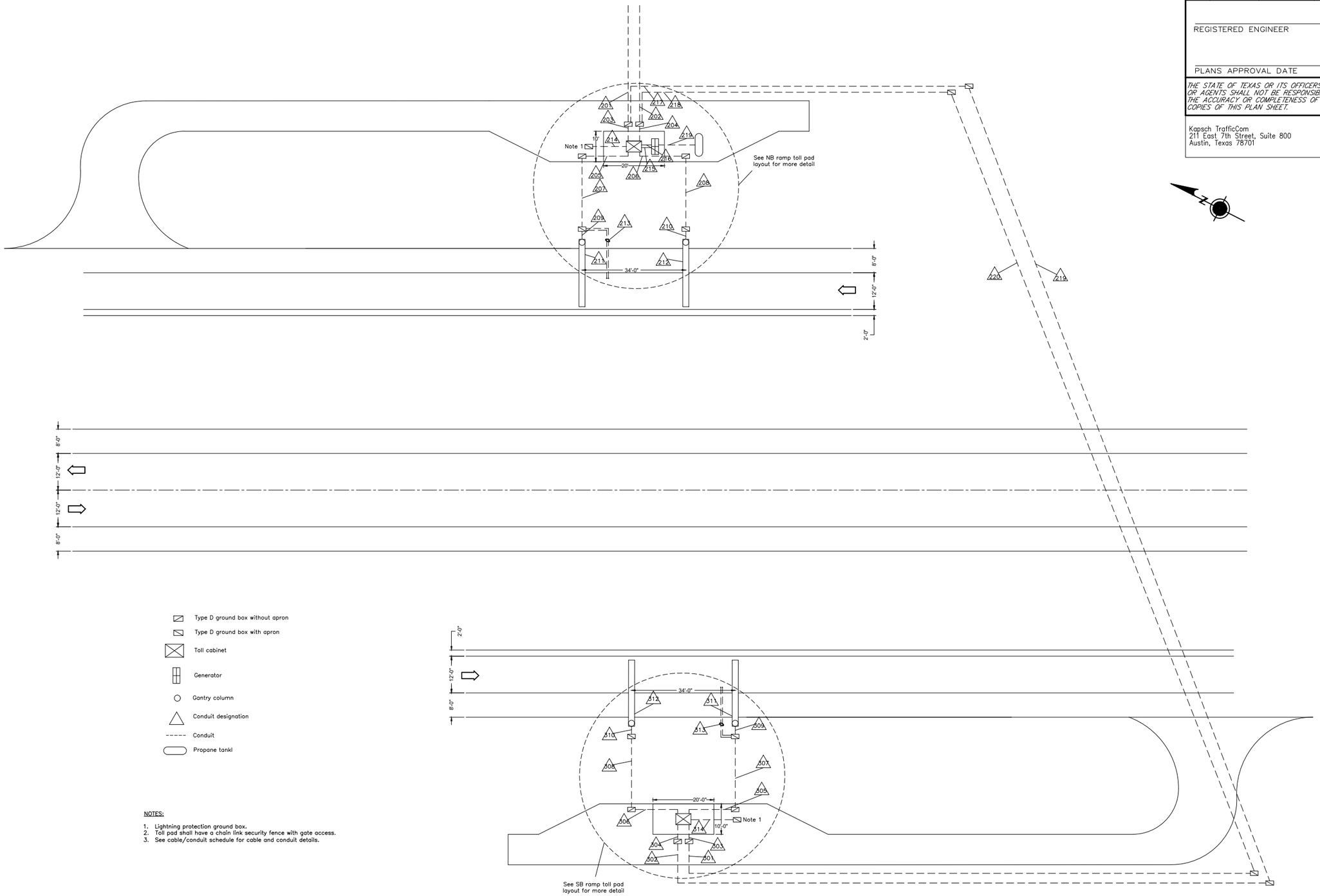

NOTES:

1. Lightning protection ground box.
2. Toll pad shall have a chain link security fence with gate access.
3. See cable/conduit schedule for cable and conduit details.

STATE OF TEXAS – DEPARTMENT OF TRANSPORTATION

CONSULTANT FUNCTIONAL SUPERVISOR: ---

CALCULATED-DESIGNED BY: T. Hammond

CHECKED BY: --

REVISED BY: T. Hammond

DATE REVISED: 4/10/2017 2:44 PM

DATE/TIME PLOTTED 6/8/2018 11:24 AM

FILENAME NETRMA SEGMENT 4 TOLLING DESIGN.DWG

LAST REVISION 00-00-00

BORDER LAST REVISED 06/08/2018 | RELATIVE BORDER SCALE IS IN INCHES 0 1 2 3 | UNIT --- | PROJECT NUMBER & PHASE --- | SHEET TITLE Ramp Zone Layout | SHEET NUMBER TL-007 | SCALE 1/32" = 1'-0"

Dist	COUNTY	ROUTE	POST MILES TOTAL PROJECT	SHEET No.	TOTAL SHEETS
---	Smith	Toll 49	0.0 / 0.0	13	65

REGISTERED ENGINEER DATE

PLANS APPROVAL DATE

THE STATE OF TEXAS OR ITS OFFICERS OR AGENTS SHALL NOT BE RESPONSIBLE FOR THE ACCURACY OR COMPLETENESS OF SCANNED COPIES OF THIS PLAN SHEET.

Kapsch TrafficCom
211 East 7th Street, Suite 800
Austin, Texas 78701

North East Texas Regional Mobility Auth.
909 ESE Loop 323, Suite 360
Tyler, Texas 75701

NOTES:

1. Lightning protection ground box.

COMPONENT WEIGHTS		
ITEM #	COMPONENT	WEIGHT (lbs.)
1	Dual bay cabinet	750.0
2	Electronics	1000.0
3	Generator	2000.0
	TOTAL	3750.0

Type D ground box without apron

Type D ground box with apron

Toll cabinet

Gantry column

Conduit designation

Conduit

Generator

Propane tankl

CONDUIT SCHEDULE			
RUN #	CONDUIT FUNCTION	CONDUIT QUANTITY	CONDUIT SIZE
201	Incoming communications	1	2"
202	Incoming power	1	3"
203	Incoming communications	1	2"
204	Incoming power	1	3"
205	DC power/comm to exit gantry	2	3"
206	DC power/comm to entry gantry	2	3"
207	DC power/comm to exit gantry	2	3"
208	DC power/comm to entry gantry	2	3"
209	DC power/comm to exit gantry	2	3"
210	DC power/comm to entry gantry	2	3"
211	Exit gantry	2	3"
212	Entry gantry	2	3"
213	To treadle stub ups	2	2"
214	Lightning protection grounding	1	2"
215	Comm to/from generator	1	2"
216	Power from generator	1	3"
217	Comm to southbound side	1	3"
218	Power to southbound side	1	3"
219	Propane conduit/sleeve	1	4"

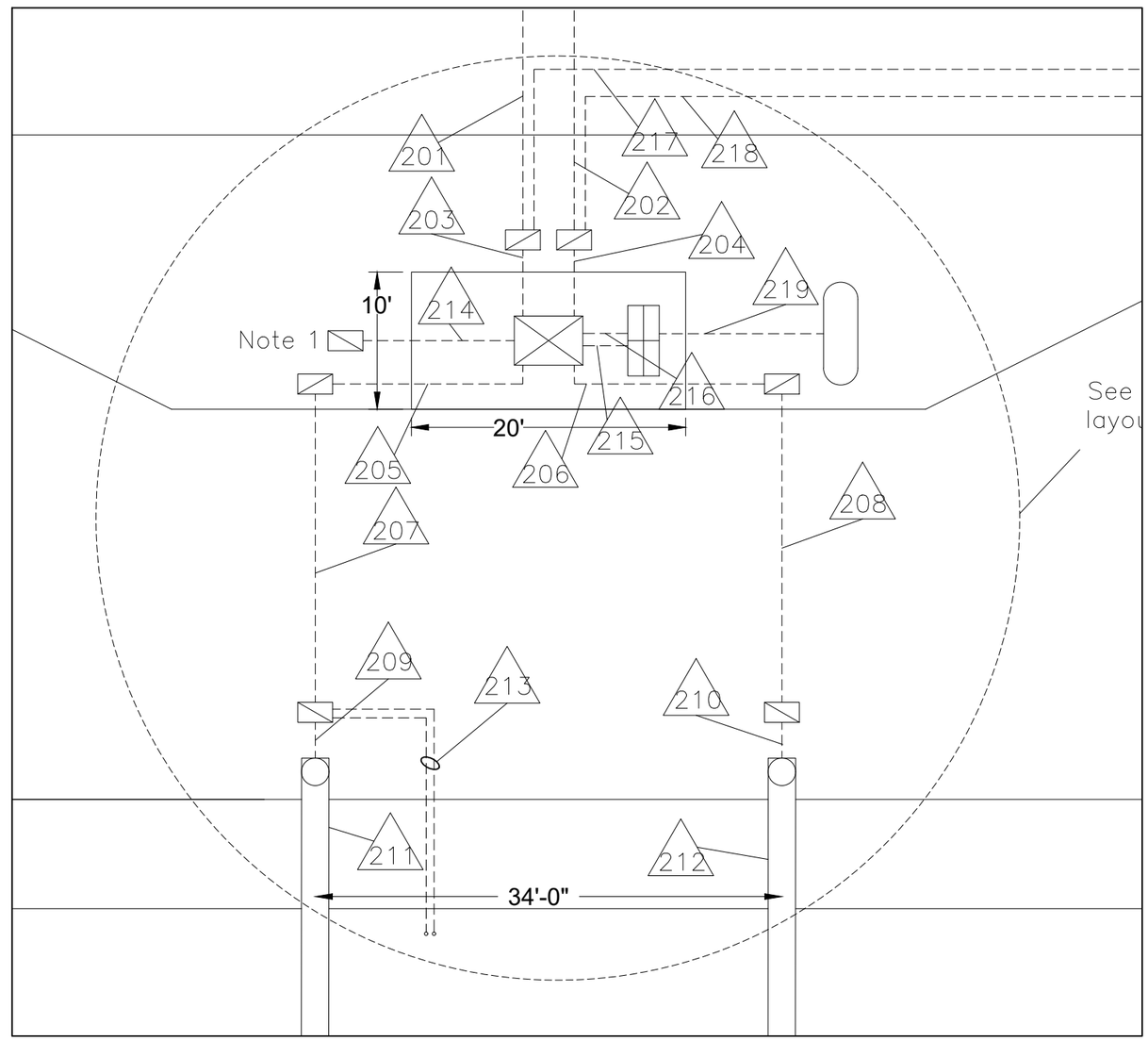

STATE OF TEXAS – DEPARTMENT OF TRANSPORTATION

CONSULTANT FUNCTIONAL SUPERVISOR ---

CALCULATED-DESIGNED BY T. Hammond

CHECKED BY --

REVISED BY T. Hammond

DATE REVISED 4/10/2017 2:44 PM

DATE/TIME PLOTTED 6/8/2018 11:24 AM

FILENAME NETRMA SEGMENT 4 TOLLING DESIGN.DWG

LAST REVISION 00-00-00

BORDER LAST REVISED 06/08/2018 | RELATIVE BORDER SCALE IS IN INCHES 0 1 2 3 | UNIT --- | PROJECT NUMBER & PHASE --- | SHEET TITLE NB Ramp Toll Pad Layout | SHEET NUMBER TL-008 | SCALE NTS

Dist	COUNTY	ROUTE	POST MILES TOTAL PROJECT	SHEET No.	TOTAL SHEETS
---	Smith	Toll 49	0.0 / 0.0	14	65

REGISTERED ENGINEER DATE

PLANS APPROVAL DATE

THE STATE OF TEXAS OR ITS OFFICERS OR AGENTS SHALL NOT BE RESPONSIBLE FOR THE ACCURACY OR COMPLETENESS OF SCANNED COPIES OF THIS PLAN SHEET.

Kapsch TrafficCom
211 East 7th Street, Suite 800
Austin, Texas 78701

North East Texas Regional Mobility Auth.
909 ESE Loop 323, Suite 360
Tyler, Texas 75701

NOTES:

1. Lightning protection ground box.

COMPONENT WEIGHTS		
ITEM #	COMPONENT	WEIGHT (lbs.)
1	Dual bay cabinet	750.0
2	Electronics	1000.0
	TOTAL	1750.0

CONDUIT SCHEDULE			
RUN #	CONDUIT FUNCTION	CONDUIT QUANTITY	CONDUIT SIZE
301	Incoming communications	1	2"
302	Incoming power	1	3"
303	Incoming communications	1	2"
304	Incoming power	1	3"
305	DC power/comm to exit gantry	2	3"
306	DC power/comm to entry gantry	2	3"
307	DC power/comm to exit gantry	2	3"
308	DC power/comm to entry gantry	2	3"
309	DC power/comm to exit gantry	2	3"
310	DC power/comm to entry gantry	2	3"
311	Exit gantry	2	3"
312	Entry gantry	2	3"
313	To treadle stub ups	2	2"
314	Lightning protection grounding	1	2"

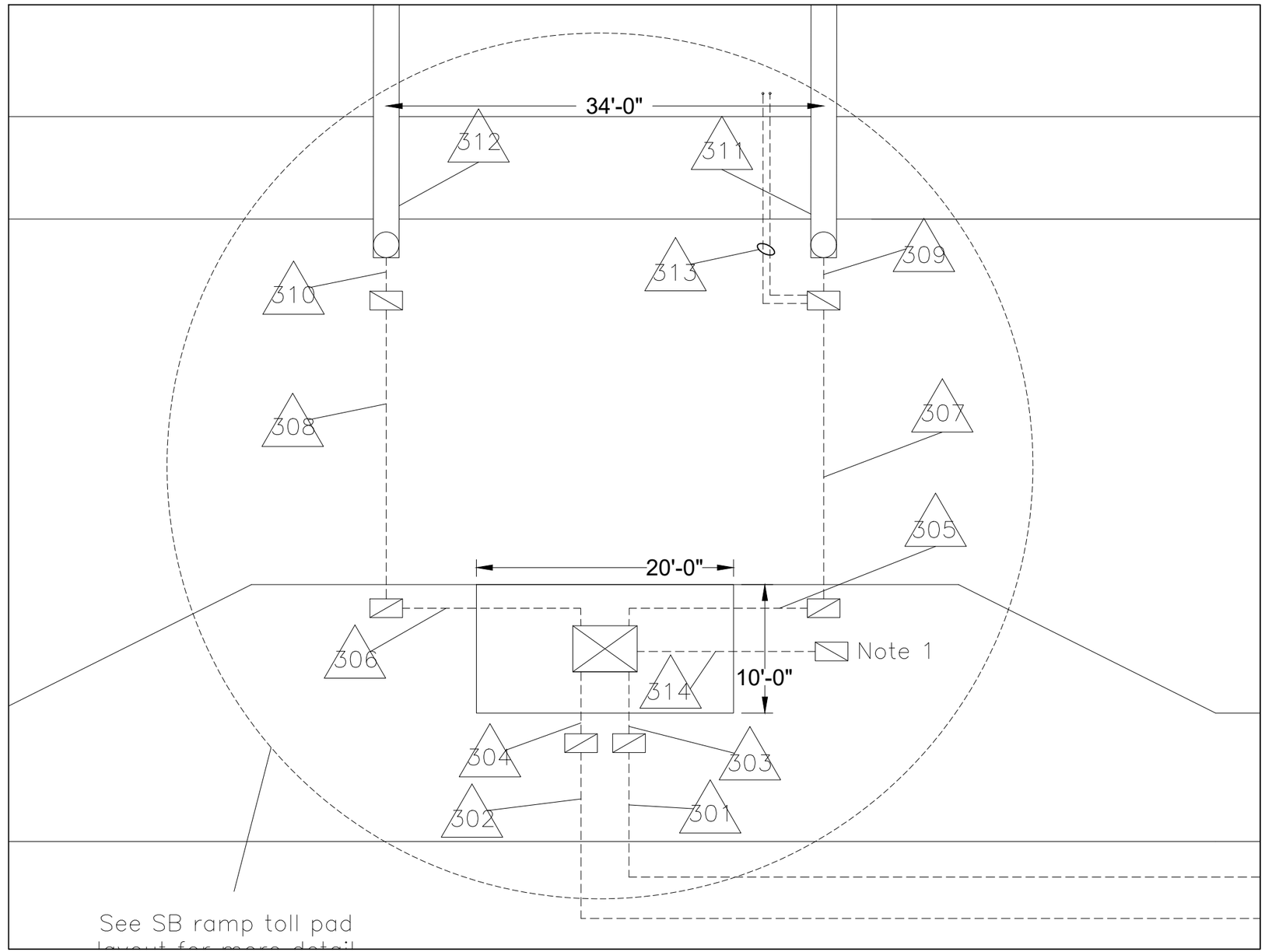

Type D ground box without apron

Type D ground box with apron

Toll cabinet

Gantry column

Conduit designation

Conduit

STATE OF TEXAS - DEPARTMENT OF TRANSPORTATION

CONSULTANT FUNCTIONAL SUPERVISOR ---

CALCULATED-DESIGNED BY T. Hammond

CHECKED BY --

REVISED BY T. Hammond

DATE REVISED 4/10/2017 2:44 PM

DATE/TIME PLOTTED 6/8/2018 11:24 AM

FILENAME NETRMA SEGMENT 4 TOLLING DESIGN.DWG

LAST REVISION 00-00-00

BORDER LAST REVISED 06/08/2018 | RELATIVE BORDER SCALE IS IN INCHES 0 1 2 3 | UNIT --- | PROJECT NUMBER & PHASE --- | SHEET TITLE SB Ramp Toll Pad Layout | SHEET NUMBER TL-009 | SCALE NTS

Dist	COUNTY	ROUTE	POST MILES TOTAL PROJECT	SHEET No.	TOTAL SHEETS
---	Smith	Toll 49	0.0 / 0.0	15	65

REGISTERED ENGINEER DATE

PLANS APPROVAL DATE

THE STATE OF TEXAS OR ITS OFFICERS OR AGENTS SHALL NOT BE RESPONSIBLE FOR THE ACCURACY OR COMPLETENESS OF SCANNED COPIES OF THIS PLAN SHEET.

Kapsch TrafficCom
211 East 7th Street, Suite 800
Austin, Texas 78701

North East Texas Regional Mobility Auth.
909 ESE Loop 323, Suite 360
Tyler, Texas 75701

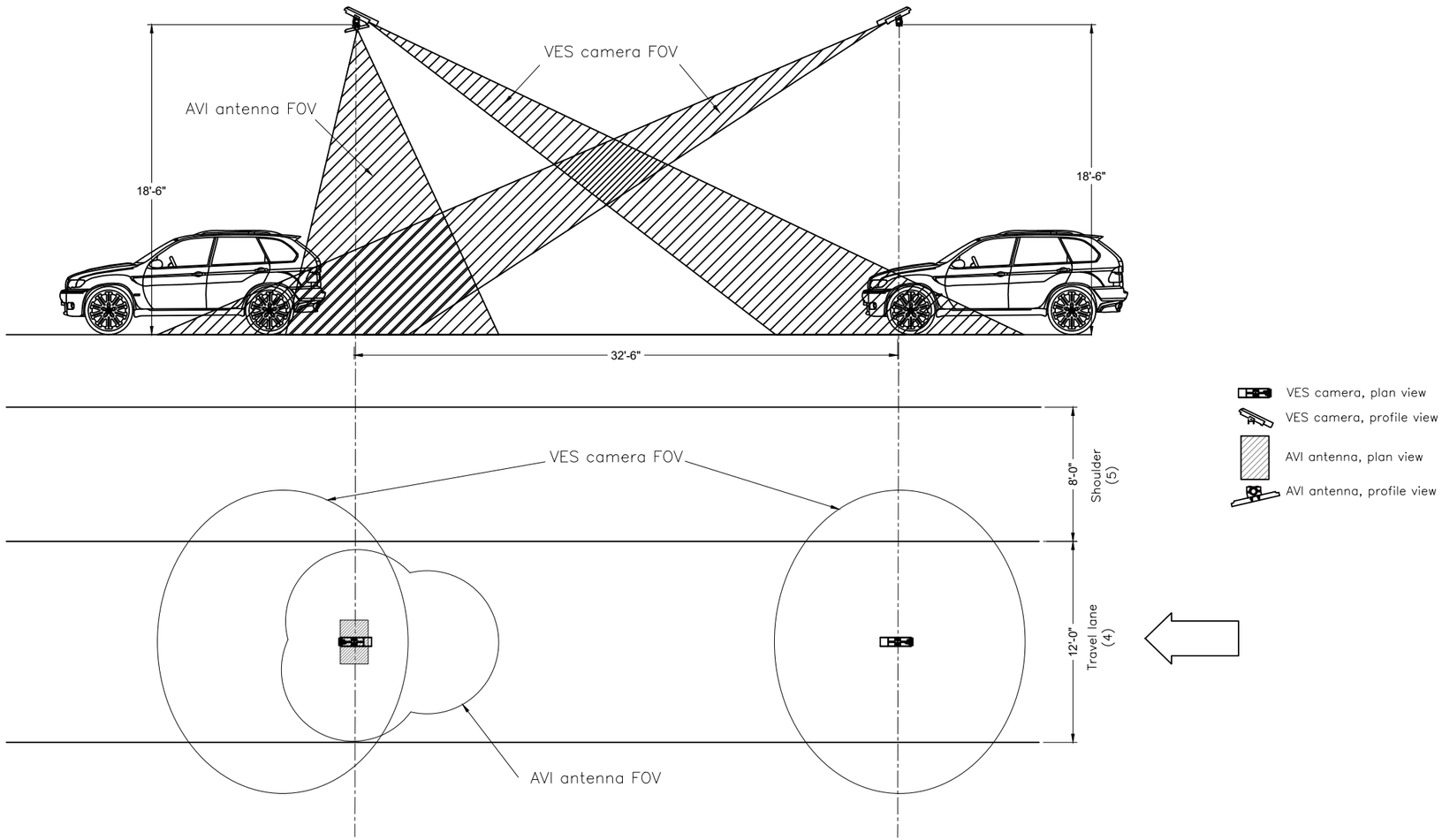

STATE OF TEXAS - DEPARTMENT OF TRANSPORTATION

CONSULTANT FUNCTIONAL SUPERVISOR ---

CALCULATED-DESIGNED BY T. Hammond

CHECKED BY --

REVISED BY T. Hammond

DATE REVISED 4/10/2017 2:44 PM

DATE/TIME PLOTTED 6/8/2018 11:24 AM

FILENAME NETRMA SEGMENT 4 TOLLING DESIGN.DWG

LAST REVISION 00-00-00

BORDER LAST REVISED 06/08/2018 | RELATIVE BORDER SCALE IS IN INCHES 0 1 2 3 | UNIT --- | PROJECT NUMBER & PHASE --- | SHEET TITLE Ramp Overhead Components' Fields Of View | SHEET NUMBER TL-010 | SCALE 1/8" = 1'-0"

Dist	COUNTY	ROUTE	POST MILES TOTAL PROJECT	SHEET No.	TOTAL SHEETS
---	Smith	Toll 49	0.0 / 0.0	16	65

REGISTERED ENGINEER DATE

PLANS APPROVAL DATE

THE STATE OF TEXAS OR ITS OFFICERS OR AGENTS SHALL NOT BE RESPONSIBLE FOR THE ACCURACY OR COMPLETENESS OF SCANNED COPIES OF THIS PLAN SHEET.

Kapsch TrafficCom
211 East 7th Street, Suite 800
Austin, Texas 78701

North East Texas Regional Mobility Auth.
909 ESE Loop 323, Suite 360
Tyler, Texas 75701

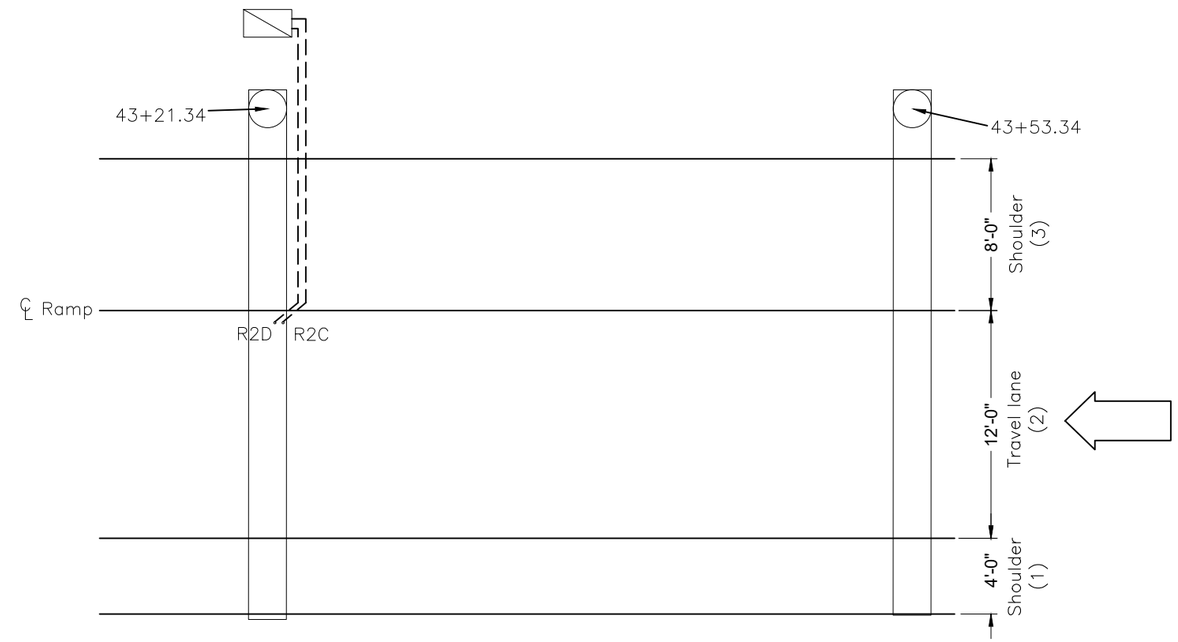

NORTHBOUND RAMP

NORTHBOUND RAMP RISER LOCATIONS				
LANE ID	LANE #	RISER C STATION	RISER D STATION	OFFSET
Shoulder	1	n/a	n/a	n/a
Travel lane	2	43+22.15	43+21.72	0.65 RT
Shoulder	3	n/a	n/a	n/a

Riser / Stub up

Ground box

--- Conduit

NOTES:

1. Toll cabinet is adjacent to lane 1.
2. All riser conduits terminate in the ground boxes.
3. All riser conduit is 1–¼" schedule 40/80 pvc.
4. See conduit schedule for conduit details.
5. Toll integrator will verify all stub up locations prior to pouring of concrete.

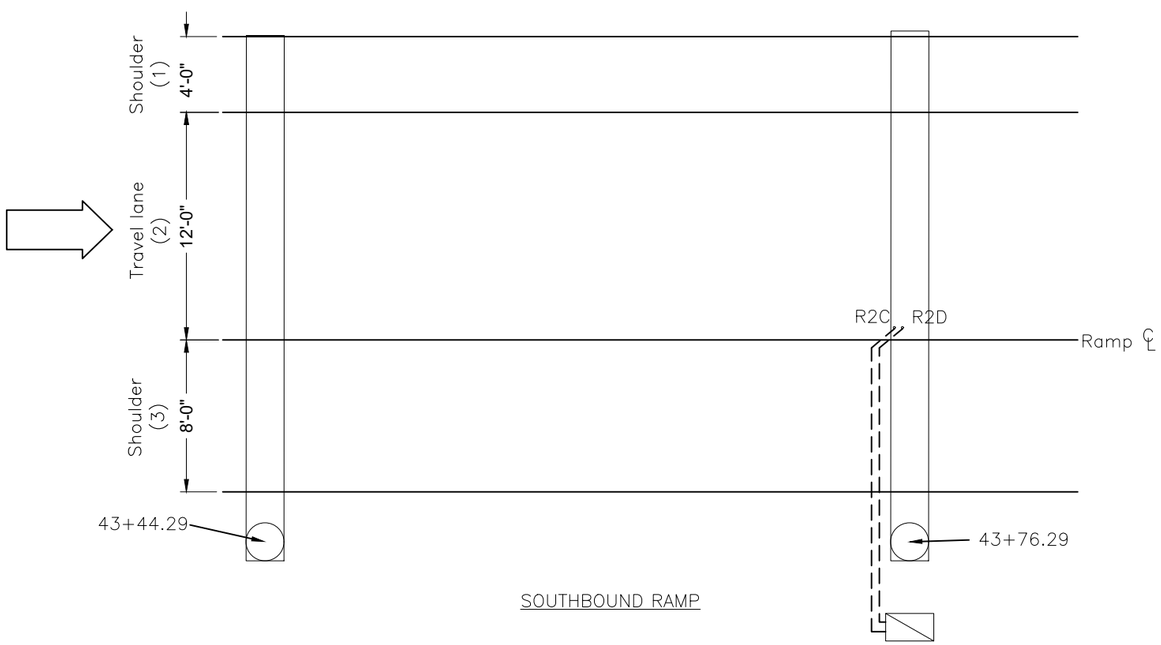

SOUTHBOUND RAMP

SOUTHBOUND RAMP RISER LOCATIONS				
LANE ID	LANE #	RISER C STATION	RISER D STATION	OFFSET
Shoulder	1	n/a	n/a	n/a
Travel lane	2	43+75.48	43+75.91	0.65 LT
Shoulder	3	n/a	n/a	n/a

STATE OF TEXAS - DEPARTMENT OF TRANSPORTATION

CONSULTANT FUNCTIONAL SUPERVISOR: ---

CALCULATED-DESIGNED BY: T. Hammond

CHECKED BY: --

REVISED BY: T. Hammond

DATE REVISED: 4/10/2017 2:44 PM

DATE/TIME PLOTTED 6/8/2018 11:24 AM

FILENAME NETRMA SEGMENT 4 TOLLING DESIGN.DWG

LAST REVISION 00-00-00

BORDER LAST REVISED 06/08/2018 | RELATIVE BORDER SCALE IS IN INCHES 0 1 2 3 | UNIT --- | PROJECT NUMBER & PHASE --- | SHEET TITLE Ramp Riser Details | SHEET NUMBER TL-011 | SCALE 1/8" = 1'-0"

Dist	COUNTY	ROUTE	POST MILES TOTAL PROJECT	SHEET No.	TOTAL SHEETS
---	Smith	Toll 49	0.0 / 0.0	17	65

REGISTERED ENGINEER DATE

PLANS APPROVAL DATE

THE STATE OF TEXAS OR ITS OFFICERS OR AGENTS SHALL NOT BE RESPONSIBLE FOR THE ACCURACY OR COMPLETENESS OF SCANNED COPIES OF THIS PLAN SHEET.

Kapsch TrafficCom
211 East 7th Street, Suite 800
Austin, Texas 78701

North East Texas Regional Mobility Auth.
909 ESE Loop 323, Suite 360
Tyler, Texas 75701

NETRMA / Kapsch TrafficCom

Toll 49, Segment 4 System Design Matrix

Matches:

Location			D/B Sheet Number							Location Information			120 / 240 VAC - 3 Wire						Northbound							Component(s)
Segment Number	Segment Name	Site ID	Station	ETS	Pad Layout	Const. Stage	Layout	Gantry	Truss Dim ("D")	Primary Cabinet	Secondary Cabinet	Design Type	Air Conditioning KVA	Lighting KVA	Tolling KVA	Total KVA	Branch Circuit Size (amps)	Wire Gauge	AVI Antenna	AVI Reader	Loops	Treadles	VES	SICK	DVAS	
			255.00							DBC	n/a	A	2.00	0.20	15.26	17.46	72.77		1	1	1	1	1	1	1	Mainline
			43.40							DBC	n/a	A	2.00	0.20	15.26	17.46	72.77		1	1	1	1	1	1	1	NB Ramp
			43.60							DBC	n/a	A	2.00	0.20	15.26	17.46	72.77		1	1	1	1	1	1	1	SB Ramp
																		Totals	3	3	3	3	3	3	3	

Legend	
SBC	Single Bay Cabinet
DBC	Dual Bay Cabinet
MPC-L	Multi Purpose Cabinet, Large
MPC-S	Multi Purpose Cabinet, Small, Pole Mount
VTMS	Varible Toll Message Sign Cluster
CMS	Changeable Message Sign
VES	Violation Enforcement Camera
SICK	Laser Scanner
TTMS	Tolling Traffic Management Sensor
CCTV	Closed Circuit TV Camera
DVAS	Digital Video Audit System

Power Load (Maximum capacity load)				
	Amps	Voltage	VA	KVA
Tolling	63.60	240	15264.00	15.26
VTMS	33.60	240	8064.00	8.06
CCTV	4.50	240	1080.00	1.08
TTMS	4.50	240	1080.00	1.08
CMS	18.00	240	4320.00	4.32
Air Cond.	8.70	230	2001.00	2.00
Ventilation	0.83	240	199.20	0.20
Lighting	0.83	240	199.20	0.20
ODS	30.00	240	7200.00	7.20

Design Type	
A	Toll Zone
B	VTMS Only
C	CCTV Only
D	TTMS Only
E	CMS Only
F	VTMS / CCTV
G	VTMS / TTMS
H	CCTV / TTMS
I	Toll Zone / TTMS

STATE OF TEXAS – DEPARTMENT OF TRANSPORTATION

CONSULTANT FUNCTIONAL SUPERVISOR ---

CALCULATED–DESIGNED BY T. Hammond

CHECKED BY --

REVISED BY T. Hammond

DATE REVISED 4/10/2017 2:44 PM

DATE/TIME PLOTTED 6/8/2018 11:24 AM

FILENAME NETRMA SEGMENT 4 TOLLING DESIGN.DWG

LAST REVISION 00-00-00

BORDER LAST REVISED 06/08/2018 | RELATIVE BORDER SCALE IS IN INCHES 0 1 2 3 | UNIT --- | PROJECT NUMBER & PHASE --- | SHEET TITLE System Design Matrix | SHEET NUMBER TL-012 | SCALE NTS

Dist	COUNTY	ROUTE	POST MILES TOTAL PROJECT	SHEET No.	TOTAL SHEETS
---	Smith	Toll 49	0.0 / 0.0	18	65

REGISTERED ENGINEER DATE

PLANS APPROVAL DATE

THE STATE OF TEXAS OR ITS OFFICERS OR AGENTS SHALL NOT BE RESPONSIBLE FOR THE ACCURACY OR COMPLETENESS OF SCANNED COPIES OF THIS PLAN SHEET.

Kapsch TrafficCom
211 East 7th Street, Suite 800
Austin, Texas 78701

North East Texas Regional Mobility Auth.
909 ESE Loop 323, Suite 360
Tyler, Texas 75701

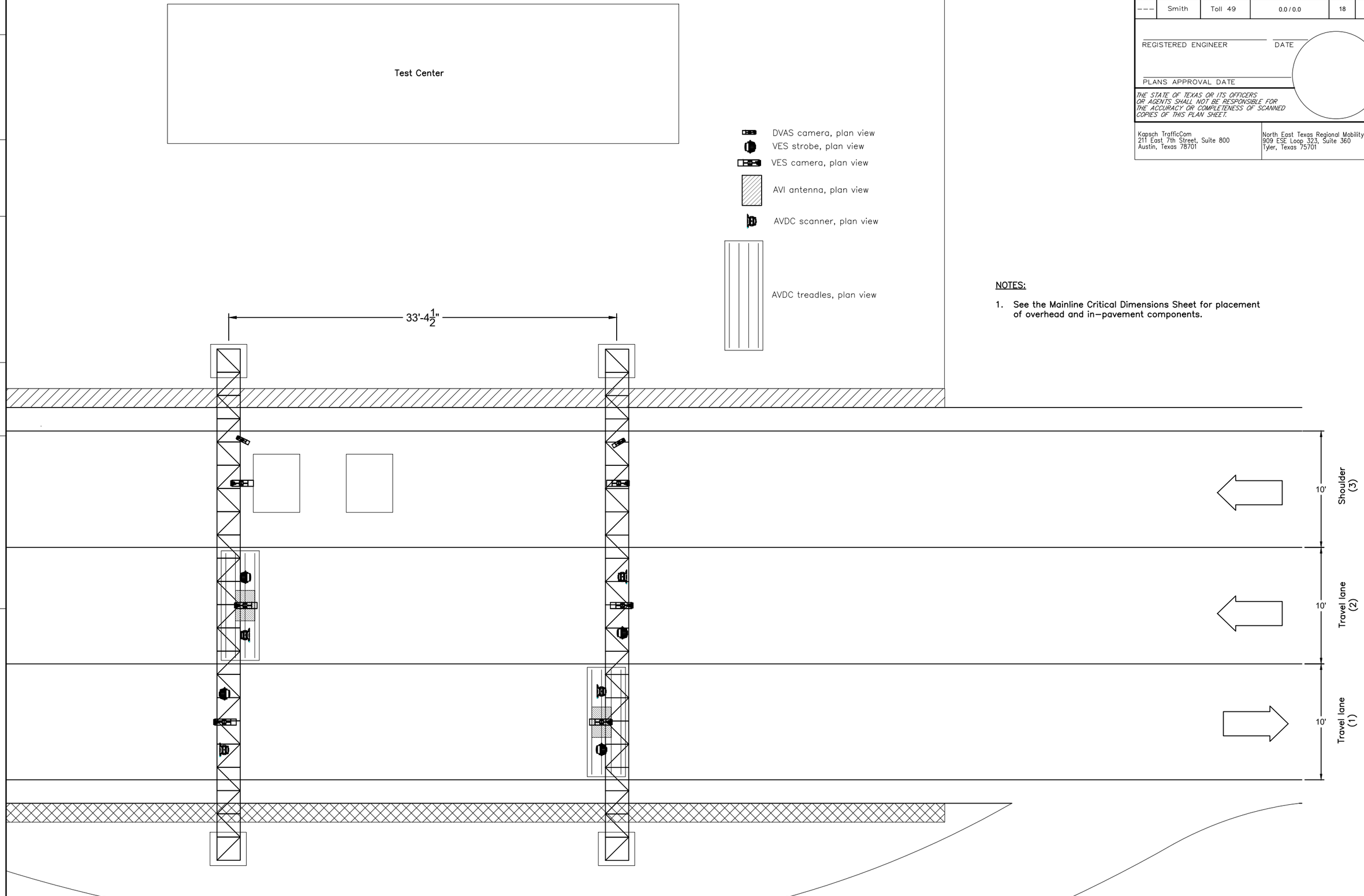

NOTES:

1. See the Mainline Critical Dimensions Sheet for placement of overhead and in-pavement components.

STATE OF TEXAS - DEPARTMENT OF TRANSPORTATION

CONSULTANT FUNCTIONAL SUPERVISOR ---

CALCULATED-DESIGNED BY T. Hammond

CHECKED BY --

REVISED BY T. Hammond

DATE REVISED 4/10/2017 2:44 PM

DATE/TIME PLOTTED 6/8/2018 11:24 AM

FILENAME NETRMA SEGMENT 4 TOLLING DESIGN.DWG

LAST REVISION 00-00-00

BORDER LAST REVISED 06/08/2018 | RELATIVE BORDER SCALE IS IN INCHES 0 1 2 3 | UNIT --- | PROJECT NUMBER & PHASE --- | SHEET TITLE Test Site Layout | SHEET NUMBER TL-013 | SCALE NTS

Dist	COUNTY	ROUTE	POST MILES TOTAL PROJECT	SHEET No.	TOTAL SHEETS
---	Smith	Toll 49	0.0 / 0.0	19	65

REGISTERED ENGINEER DATE

PLANS APPROVAL DATE

THE STATE OF TEXAS OR ITS OFFICERS OR AGENTS SHALL NOT BE RESPONSIBLE FOR THE ACCURACY OR COMPLETENESS OF SCANNED COPIES OF THIS PLAN SHEET.

Kapsch TrafficCom
211 East 7th Street, Suite 800
Austin, Texas 78701

North East Texas Regional Mobility Auth.
909 ESE Loop 323, Suite 360
Tyler, Texas 75701

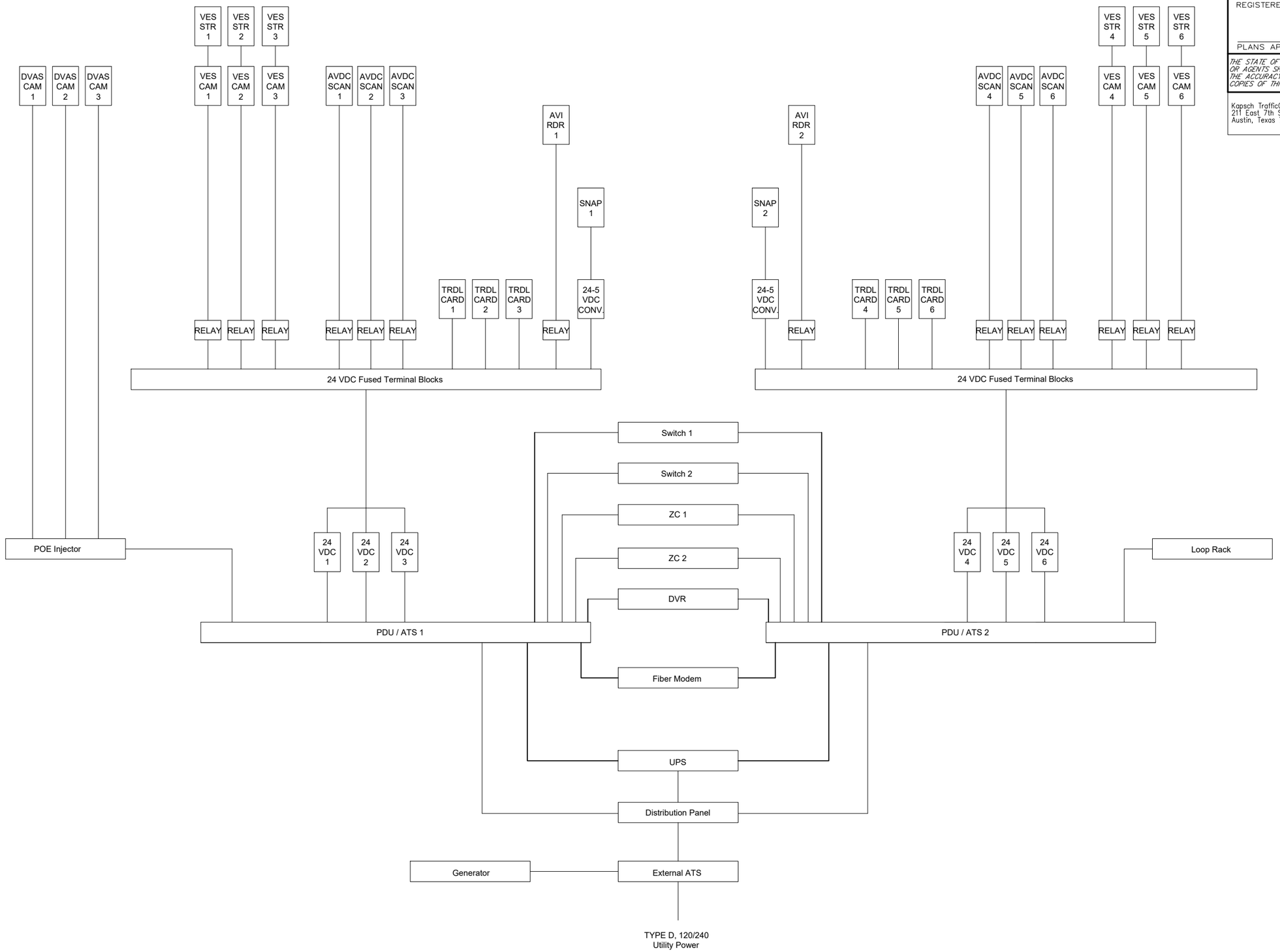

STATE OF TEXAS – DEPARTMENT OF TRANSPORTATION	CONSULTANT FUNCTIONAL SUPERVISOR	CALCULATED–DESIGNED BY	T. Hammond
	---	CHECKED BY	--
		REVISED BY	T. Hammond
		DATE REVISED	4/10/2017 2:44 PM

DATE/TIME PLOTTED 6/8/2018 11:24 AM

FILENAME NETRMA SEGMENT 4 TOLLING DESIGN.DWG

LAST REVISION 00-00-00

BORDER LAST REVISED 06/08/2018 | RELATIVE BORDER SCALE IS IN INCHES 0 1 2 3 | UNIT --- | PROJECT NUMBER & PHASE --- | SHEET TITLE Mainlane Power Block Diagram | SHEET NUMBER PC-001 | SCALE NTS

Dist	COUNTY	ROUTE	POST MILES TOTAL PROJECT	SHEET No.	TOTAL SHEETS
---	Smith	Toll 49	0.0 / 0.0	20	65

REGISTERED ENGINEER DATE

PLANS APPROVAL DATE

THE STATE OF TEXAS OR ITS OFFICERS OR AGENTS SHALL NOT BE RESPONSIBLE FOR THE ACCURACY OR COMPLETENESS OF SCANNED COPIES OF THIS PLAN SHEET.

Kapsch TrafficCom
211 East 7th Street, Suite 800
Austin, Texas 78701

North East Texas Regional Mobility Auth.
909 ESE Loop 323, Suite 360
Tyler, Texas 75701

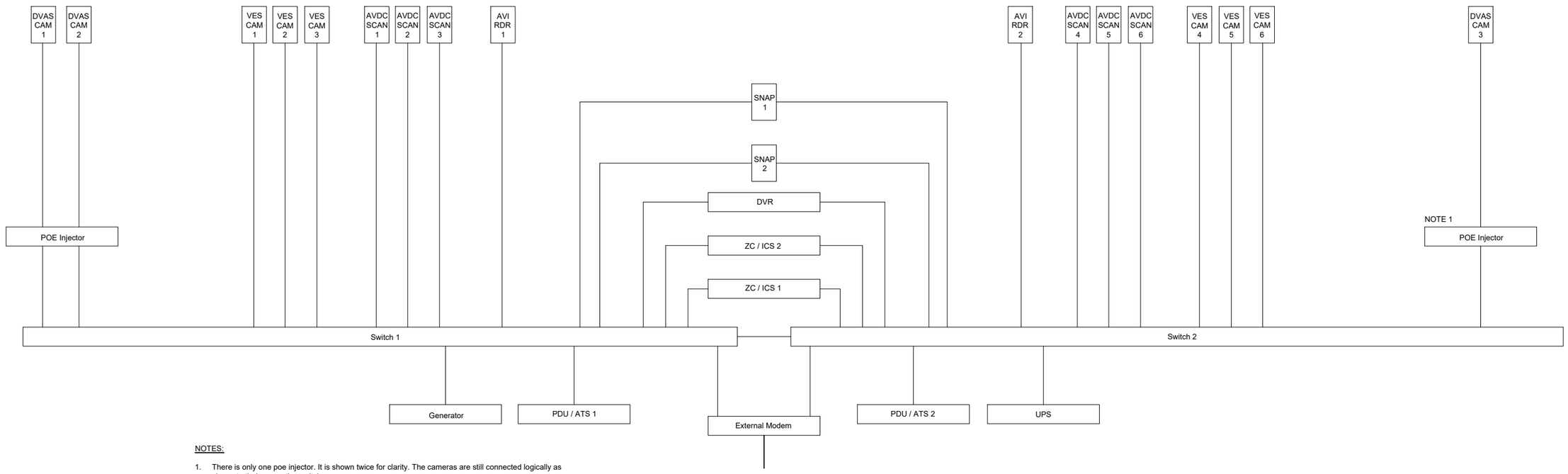

NOTES:

1. There is only one poe injector. It is shown twice for clarity. The cameras are still connected logically as shown to their respective switches.

REVISED BY	DATE REVISED
T. Hammond	4/10/2017 2:44 PM

CALCULATED-DESIGNED BY	CHECKED BY
T. Hammond	--

CONSULTANT FUNCTIONAL SUPERVISOR ---

STATE OF TEXAS - DEPARTMENT OF TRANSPORTATION

DATE/TIME PLOTTED 6/8/2018 11:24 AM

FILENAME NETRMA SEGMENT 4 TOLLING DESIGN.DWG

LAST REVISION 00-00-00

BORDER LAST REVISED 06/08/2018 | RELATIVE BORDER SCALE IS IN INCHES 0 1 2 3 | UNIT --- | PROJECT NUMBER & PHASE --- | SHEET TITLE Mainlane Network Block Diagram | SHEET NUMBER PC-002 | SCALE NTS

Dist	COUNTY	ROUTE	POST MILES TOTAL PROJECT	SHEET No.	TOTAL SHEETS
---	Smith	Toll 49	0.0 / 0.0	21	65

REGISTERED ENGINEER DATE

PLANS APPROVAL DATE

THE STATE OF TEXAS OR ITS OFFICERS OR AGENTS SHALL NOT BE RESPONSIBLE FOR THE ACCURACY OR COMPLETENESS OF SCANNED COPIES OF THIS PLAN SHEET.

Kapsch TrafficCom
211 East 7th Street, Suite 800
Austin, Texas 78701

North East Texas Regional Mobility Auth.
909 ESE Loop 323, Suite 360
Tyler, Texas 75701

Electrical Service Summary									
Service number	Service description	Service conduit size	Service conductor qty/size	Service breaker pole/amp	Circuit number	Branch circuit ID	Branch breaker pole/amp	Branch circuit amps	KVA load
TBD	Elec serv TY D (120/240) 200 (NS) GS (N) GC (O)	2"	TBD	2P/200	TBD	Mainlane zone	2P/100	72.75	17.46

NOTES:

1. Wire gauges are estimated and will be completed by others.

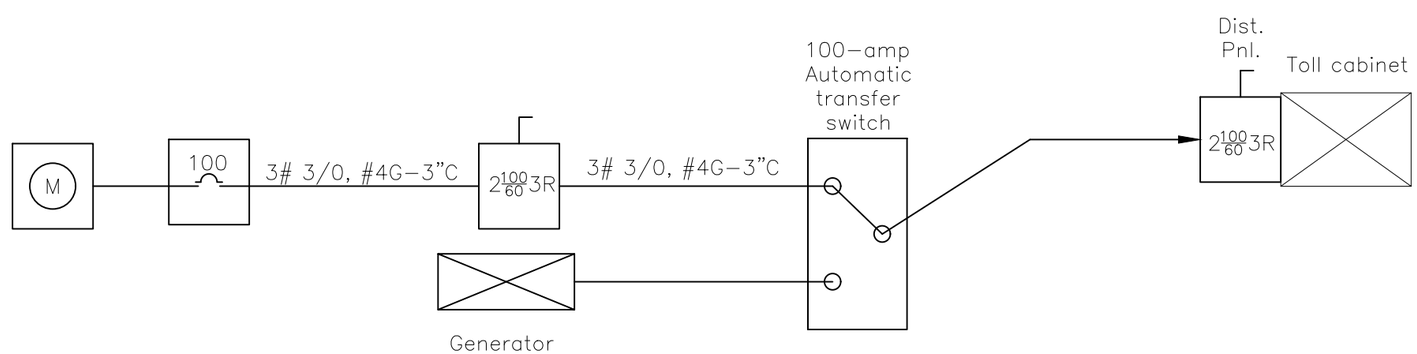

STATE OF TEXAS – DEPARTMENT OF TRANSPORTATION

CONSULTANT FUNCTIONAL SUPERVISOR ...

CALCULATED–DESIGNED BY T. Hammond

CHECKED BY --

REVISED BY T. Hammond

DATE REVISED 4/10/2017 2:44 PM

DATE/TIME PLOTTED 6/8/2018 11:24 AM

FILENAME NETRMA SEGMENT 4 TOLLING DESIGN.DWG

LAST REVISION 00-00-00

BORDER LAST REVISED 06/08/2018 | RELATIVE BORDER SCALE IS IN INCHES 0 1 2 3 | UNIT --- | PROJECT NUMBER & PHASE --- | SHEET TITLE Mainlane Power Schematic | SHEET NUMBER PC-003 | SCALE NTS

Dist	COUNTY	ROUTE	POST MILES TOTAL PROJECT	SHEET No.	TOTAL SHEETS
---	Smith	Toll 49	0.0 / 0.0	22	65

REGISTERED ENGINEER DATE

PLANS APPROVAL DATE

THE STATE OF TEXAS OR ITS OFFICERS OR AGENTS SHALL NOT BE RESPONSIBLE FOR THE ACCURACY OR COMPLETENESS OF SCANNED COPIES OF THIS PLAN SHEET.

Kapsch TrafficCom
211 East 7th Street, Suite 800
Austin, Texas 78701

North East Texas Regional Mobility Auth.
909 ESE Loop 323, Suite 360
Tyler, Texas 75701

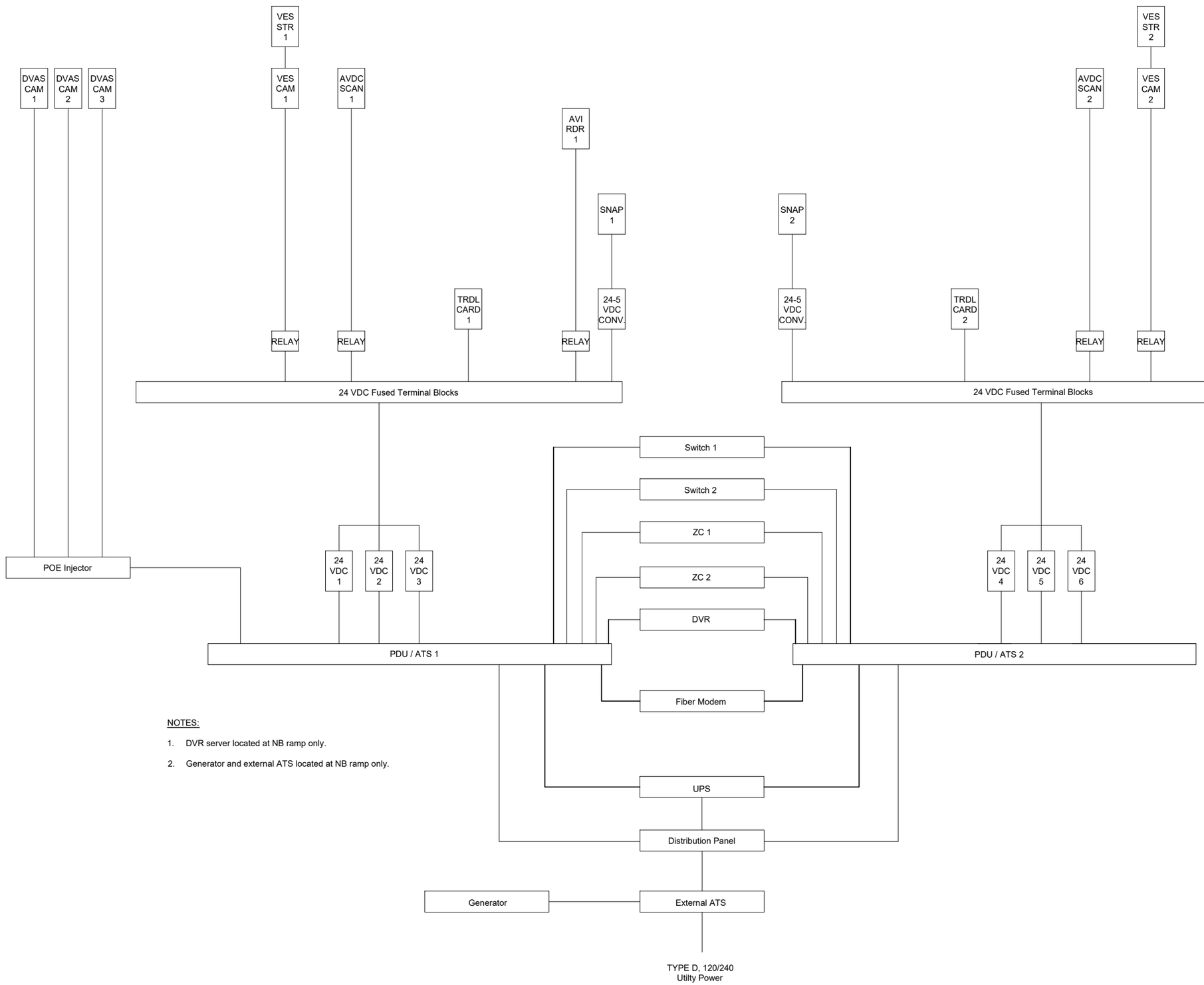

NOTES:

1. DVR server located at NB ramp only.
2. Generator and external ATS located at NB ramp only.

T. Hammond	REVISED BY	T. Hammond	CALCULATED-DESIGNED BY
4/10/2017 2:44 PM	DATE REVISED	--	CHECKED BY

CONSULTANT FUNCTIONAL SUPERVISOR ---

STATE OF TEXAS - DEPARTMENT OF TRANSPORTATION

DATE/TIME PLOTTED 6/8/2018 11:24 AM

FILENAME NETRMA SEGMENT 4 TOLLING DESIGN.DWG

LAST REVISION 00-00-00

BORDER LAST REVISED 06/08/2018 | RELATIVE BORDER SCALE IS IN INCHES 0 1 2 3 | UNIT --- | PROJECT NUMBER & PHASE --- | SHEET TITLE Ramp Power Block Diagram | SHEET NUMBER PC-004 | SCALE NTS

Dist	COUNTY	ROUTE	POST MILES TOTAL PROJECT	SHEET No.	TOTAL SHEETS
---	Smith	Toll 49	0.0 / 0.0	23	65

REGISTERED ENGINEER DATE

PLANS APPROVAL DATE

THE STATE OF TEXAS OR ITS OFFICERS OR AGENTS SHALL NOT BE RESPONSIBLE FOR THE ACCURACY OR COMPLETENESS OF SCANNED COPIES OF THIS PLAN SHEET.

Kapsch TrafficCom
211 East 7th Street, Suite 800
Austin, Texas 78701

North East Texas Regional Mobility Auth.
909 ESE Loop 323, Suite 360
Tyler, Texas 75701

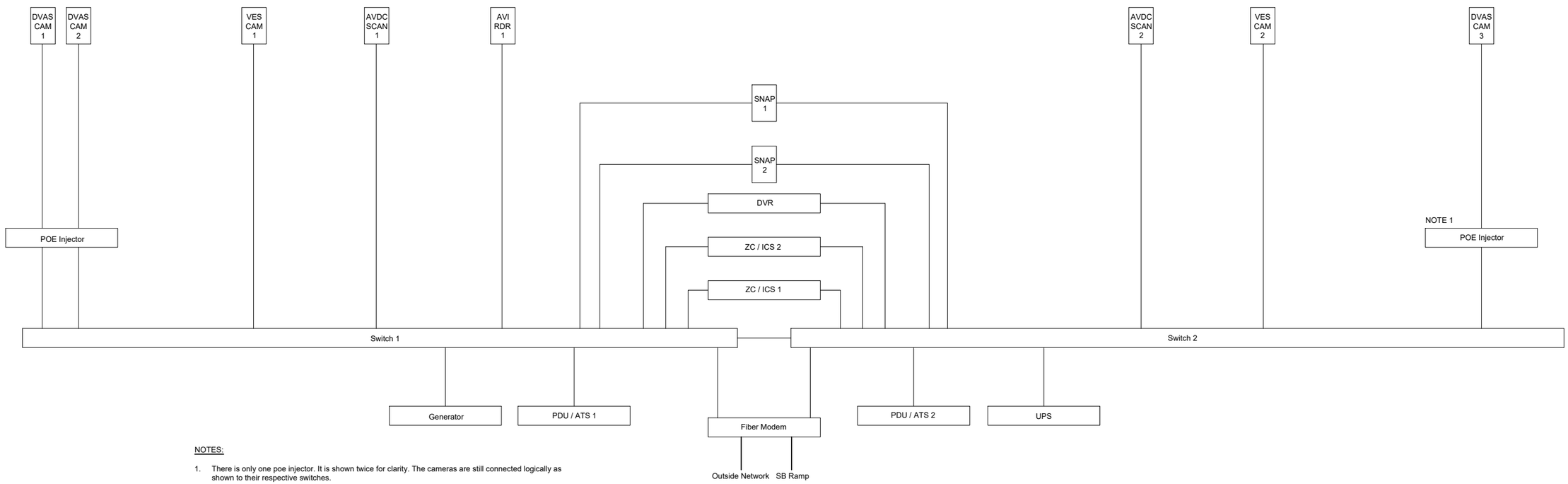

NOTES:

1. There is only one poe injector. It is shown twice for clarity. The cameras are still connected logically as shown to their respective switches.
2. DVR server located at NB ramp only.
3. Generator and external ATS located at NB ramp only.
4. Fiber modem located at NB ramp only.

REVISED BY	T. Hammond
DATE REVISED	4/10/2017 2:44 PM
CALCULATED-DESIGNED BY	T. Hammond
CHECKED BY	--
CONSULTANT FUNCTIONAL SUPERVISOR	---

STATE OF TEXAS - DEPARTMENT OF TRANSPORTATION

DATE/TIME PLOTTED 6/8/2018 11:24 AM

FILENAME NETRMA SEGMENT 4 TOLLING DESIGN.DWG

LAST REVISION 00-00-00

BORDER LAST REVISED 06/08/2018 | RELATIVE BORDER SCALE IS IN INCHES 0 1 2 3 | UNIT --- | PROJECT NUMBER & PHASE --- | SHEET TITLE Ramp Network Block Diagram | SHEET NUMBER PC-005 | SCALE NTS

Dist	COUNTY	ROUTE	POST MILES TOTAL PROJECT	SHEET No.	TOTAL SHEETS
---	Smith	Toll 49	0.0 / 0.0	24	65

REGISTERED ENGINEER DATE

PLANS APPROVAL DATE

THE STATE OF TEXAS OR ITS OFFICERS OR AGENTS SHALL NOT BE RESPONSIBLE FOR THE ACCURACY OR COMPLETENESS OF SCANNED COPIES OF THIS PLAN SHEET.

Kapsch TrafficCom
211 East 7th Street, Suite 800
Austin, Texas 78701

North East Texas Regional Mobility Auth.
909 ESE Loop 323, Suite 360
Tyler, Texas 75701

Electrical Service Summary									
Service number	Service description	Service conduit size	Service conductor qty/size	Service breaker pole/amp	Circuit number	Branch circuit ID	Branch breaker pole/amp	Branch circuit amps	KVA load
TBD	Elec serv TY D (120/240) 200 (NS) GS (N) GC (O)	2"	TBD	2P/200	TBD-A	NB Ramp	2P/100	72.75	17.46
					TBD-B	SB Ramp	2P/100	72.75	17.46

NOTES:

1. Wire gauges are estimated and will be completed by others.

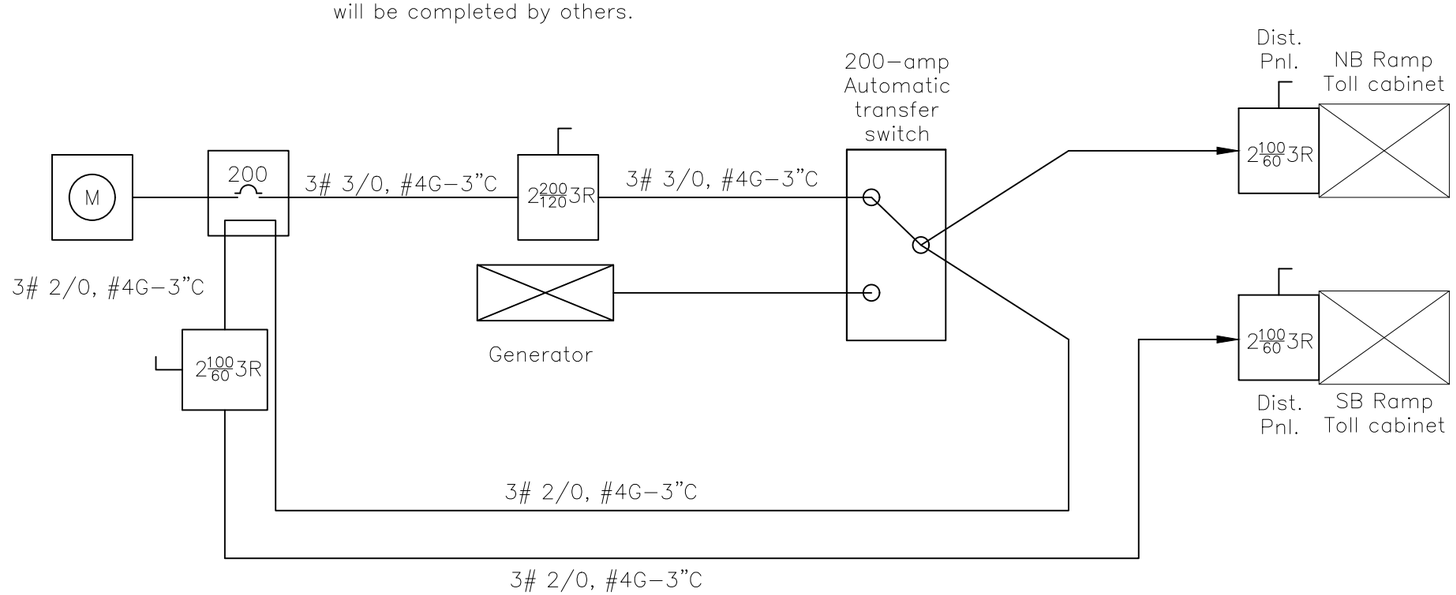

STATE OF TEXAS - DEPARTMENT OF TRANSPORTATION

CONSULTANT FUNCTIONAL SUPERVISOR ---

CALCULATED-DESIGNED BY T. Hammond

CHECKED BY --

REVISED BY T. Hammond

DATE REVISED 4/10/2017 2:44 PM

DATE/TIME PLOTTED 6/8/2018 11:24 AM

FILENAME NETRMA SEGMENT 4 TOLLING DESIGN.DWG

LAST REVISION 00-00-00

BORDER LAST REVISED 06/08/2018 | RELATIVE BORDER SCALE IS IN INCHES 0 1 2 3 | UNIT --- | PROJECT NUMBER & PHASE --- | SHEET TITLE Ramp Power Schematic | SHEET NUMBER PC-006 | SCALE NTS

Dist	COUNTY	ROUTE	POST MILES TOTAL PROJECT	SHEET No.	TOTAL SHEETS
---	Smith	Toll 49	0.0 / 0.0	25	65

REGISTERED ENGINEER DATE

PLANS APPROVAL DATE

THE STATE OF TEXAS OR ITS OFFICERS OR AGENTS SHALL NOT BE RESPONSIBLE FOR THE ACCURACY OR COMPLETENESS OF SCANNED COPIES OF THIS PLAN SHEET.

Kapsch TrafficCom
211 East 7th Street, Suite 800
Austin, Texas 78701

North East Texas Regional Mobility Auth.
909 ESE Loop 323, Suite 360
Tyler, Texas 75701

This sheet intentionally left blank

STATE OF TEXAS - DEPARTMENT OF TRANSPORTATION	CONSULTANT FUNCTIONAL SUPERVISOR	CALCULATED-DESIGNED BY	T. Hammond	REVISED BY	T. Hammond
	---	CHECKED BY	---	DATE REVISED	4/10/2017 2:44 PM

DATE/TIME PLOTTED 6/8/2018 11:24 AM

FILENAME NETRMA SEGMENT 4 TOLLING DESIGN.DWG

LAST REVISION 00-00-00

Dist	COUNTY	ROUTE	POST MILES TOTAL PROJECT	SHEET No.	TOTAL SHEETS
---	Smith	Toll 49	0.0 / 0.0	26	65

REGISTERED ENGINEER DATE

PLANS APPROVAL DATE

THE STATE OF TEXAS OR ITS OFFICERS OR AGENTS SHALL NOT BE RESPONSIBLE FOR THE ACCURACY OR COMPLETENESS OF SCANNED COPIES OF THIS PLAN SHEET.

Kapsch TrafficCom
211 East 7th Street, Suite 800
Austin, Texas 78701

North East Texas Regional Mobility Auth.
909 ESE Loop 323, Suite 360
Tyler, Texas 75701

This sheet intentionally left blank

STATE OF TEXAS - DEPARTMENT OF TRANSPORTATION

CONSULTANT FUNCTIONAL SUPERVISOR	CALCULATED-DESIGNED BY	T. Hammond	REVISED BY	T. Hammond
---	CHECKED BY	---	DATE REVISED	4/10/2017 2:44 PM

DATE/TIME PLOTTED 6/8/2018 11:24 AM

FILENAME NETRMA SEGMENT 4 TOLLING DESIGN.DWG

LAST REVISION 00-00-00

BORDER LAST REVISED 06/08/2018 | RELATIVE BORDER SCALE IS IN INCHES 0 1 2 3 | UNIT --- | PROJECT NUMBER & PHASE --- | SHEET TITLE Network Device List - 2 | SHEET NUMBER PC-008 | SCALE NTS

Dist	COUNTY	ROUTE	POST MILES TOTAL PROJECT	SHEET No.	TOTAL SHEETS
---	Smith	Toll 49	0.0 / 0.0	27	65

REGISTERED ENGINEER DATE

PLANS APPROVAL DATE

THE STATE OF TEXAS OR ITS OFFICERS OR AGENTS SHALL NOT BE RESPONSIBLE FOR THE ACCURACY OR COMPLETENESS OF SCANNED COPIES OF THIS PLAN SHEET.

Kapsch TrafficCom
211 East 7th Street, Suite 800
Austin, Texas 78701

North East Texas Regional Mobility Auth.
909 ESE Loop 323, Suite 360
Tyler, Texas 75701

VES CAMERA I/O BOARD (X4) PINOUT			
PIN #	COLOR	CABLE	SIGNAL
1	White/Orange	1140726-B	ETH A+
2	Orange	1140726-B	ETH A-
3	White/Green	1140726-B	ETH B+
4	Green	1140726-B	ETH B-
5	WHITE/BLUE	N/A	ETH C+
6	BLUE	N/A	ETH C-
7	WHITE/BROWN	N/A	ETH D+
8	BROWN	N/A	ETH D-
9	BLACK	N/A	GND
10	ORANGE	N/A	+24VDC
11	ORANGE/WHITE	N/A	VINIT+
12	BLACK/WHITE	N/A	VINIT-
13	N/A	N/A	RS485D+
14	N/A	N/A	RS485D-
15	N/A	N/A	RS485D+
16	N/A	N/A	RS485D-

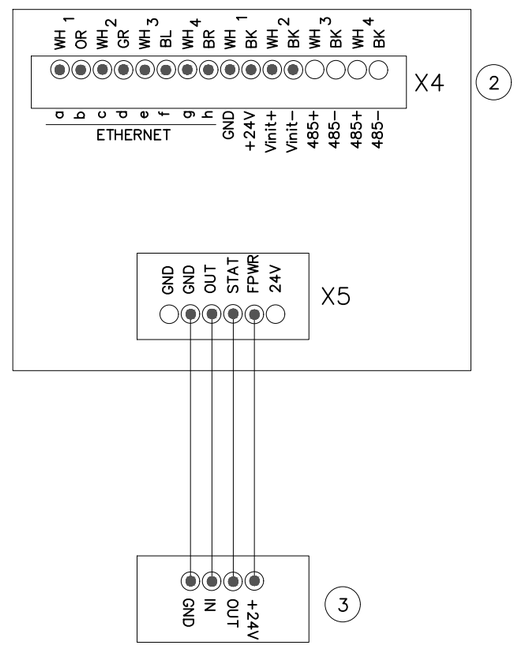

VES CAMERA I/O BOARD (X5) PINOUT			
PIN #	COLOR	CABLE	SIGNAL
1	n/a	n/a	IO board ground
2	Black	1140726-B	Flash ground
3	Orange/White	1140726-B	Strobe out
4	Black/White	1140726-B	Strobe status
5	Orange	1140726-B	Flash power
6	n/a	n/a	IO board 24V

VES STROBE I/O BOARD PINOUT			
PIN #	COLOR	CABLE	SIGNAL
1	Black	1140726-B	Ground
2	Orange/White	1140726-B	Strobe in
3	Black/White	1140726-B	Strobe status out
4	Orange	1140726-B	+24VDC

NOTES:

1. See low voltage wiring details for camera wiring connections.

(2.) VES camera I/O board.

(3.) VES strobe I/O board.

STATE OF TEXAS – DEPARTMENT OF TRANSPORTATION

CONSULTANT FUNCTIONAL SUPERVISOR ---

CALCULATED–DESIGNED BY T. Hammond

CHECKED BY --

REVISED BY T. Hammond

DATE REVISED 4/10/2017 2:44 PM

DATE/TIME PLOTTED 6/8/2018 11:24 AM

FILENAME NETRMA SEGMENT 4 TOLLING DESIGN.DWG

LAST REVISION 00-00-00

BORDER LAST REVISED 06/08/2018 | RELATIVE BORDER SCALE IS IN INCHES 0 1 2 3 | UNIT --- | PROJECT NUMBER & PHASE --- | SHEET TITLE VES Camera-Strobe Connection Details | SHEET NUMBER PC-009 | SCALE NTS

Dist	COUNTY	ROUTE	POST MILES TOTAL PROJECT	SHEET No.	TOTAL SHEETS
---	Smith	Toll 49	0.0 / 0.0	28	65

REGISTERED ENGINEER DATE

PLANS APPROVAL DATE

THE STATE OF TEXAS OR ITS OFFICERS OR AGENTS SHALL NOT BE RESPONSIBLE FOR THE ACCURACY OR COMPLETENESS OF SCANNED COPIES OF THIS PLAN SHEET.

Kapsch TrafficCom
211 East 7th Street, Suite 800
Austin, Texas 78701

North East Texas Regional Mobility Auth.
909 ESE Loop 323, Suite 360
Tyler, Texas 75701

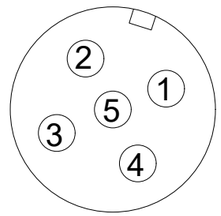

POWER CONNECTION

M12x5 PLUG A-TYPE

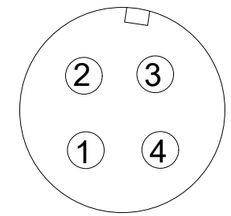

NETWORK CONNECTION

M12x4 SOCKET D-TYPE

AVDC SCANNER POWER WIRING DETAIL

PIN	SIGNAL	FUNCTION	CONDUCTOR TYPE	CONDUCTOR COLOR
1	24 V SYS	Power supply sensor	1140726-B	Orange
2	24 V HEAT	Power supply heater	1140726-B	Org/Wht
3	GND SYS	Ground power supply sensor	1140726-B	Black
4	RESERVED	Do not use	n/a	n/a
5	GND HEAT	Ground power supply heater	1140726-B	Blk/Wht

AVC SCANNER NETWORK WIRING DETAIL

PIN	SIGNAL	FUNCTION	CONDUCTOR TYPE	CONDUCTOR COLOR
1	TX+	Transmit +	1140726-B	White/Orange
2	RX+	Receive +	1140726-B	White/Green
3	TX-	Transmit -	1140726-B	Orange
4	RX-	Receive -	1140726-B	Green

NOTES:

1. See low voltage wiring detail sheet for AVDC scanner power connection to specific terminal blocks.
2. See network block diagram for AVDC scanner network connection to specific switch.
3. All four wires of the power conductor can be used to wire the scanner system power separate from the heater; or pins 1 and 2 can be jumpered, and pins 3 and 5 can be jumpered at the scanner or at the terminal blocks.

REVISED BY	T. Hammond
DATE REVISED	4/10/2017 2:44 PM
CALCULATED-DESIGNED BY	T. Hammond
CHECKED BY	--
CONSULTANT FUNCTIONAL SUPERVISOR	---

STATE OF TEXAS - DEPARTMENT OF TRANSPORTATION

DATE/TIME PLOTTED 6/8/2018 11:24 AM

FILENAME NETRMA SEGMENT 4 TOLLING DESIGN.DWG

LAST REVISION 00-00-00

BORDER LAST REVISED 06/08/2018 | RELATIVE BORDER SCALE IS IN INCHES 0 1 2 3 | UNIT --- | PROJECT NUMBER & PHASE --- | SHEET TITLE AVDC Scanner Connection Details | SHEET NUMBER PC-010 | SCALE NTS

Dist	COUNTY	ROUTE	POST MILES TOTAL PROJECT	SHEET No.	TOTAL SHEETS
---	Smith	Toll 49	0.0 / 0.0	29	65

REGISTERED ENGINEER DATE

PLANS APPROVAL DATE

THE STATE OF TEXAS OR ITS OFFICERS OR AGENTS SHALL NOT BE RESPONSIBLE FOR THE ACCURACY OR COMPLETENESS OF SCANNED COPIES OF THIS PLAN SHEET.

Kapsch TrafficCom
211 East 7th Street, Suite 800
Austin, Texas 78701

North East Texas Regional Mobility Auth.
909 ESE Loop 323, Suite 360
Tyler, Texas 75701

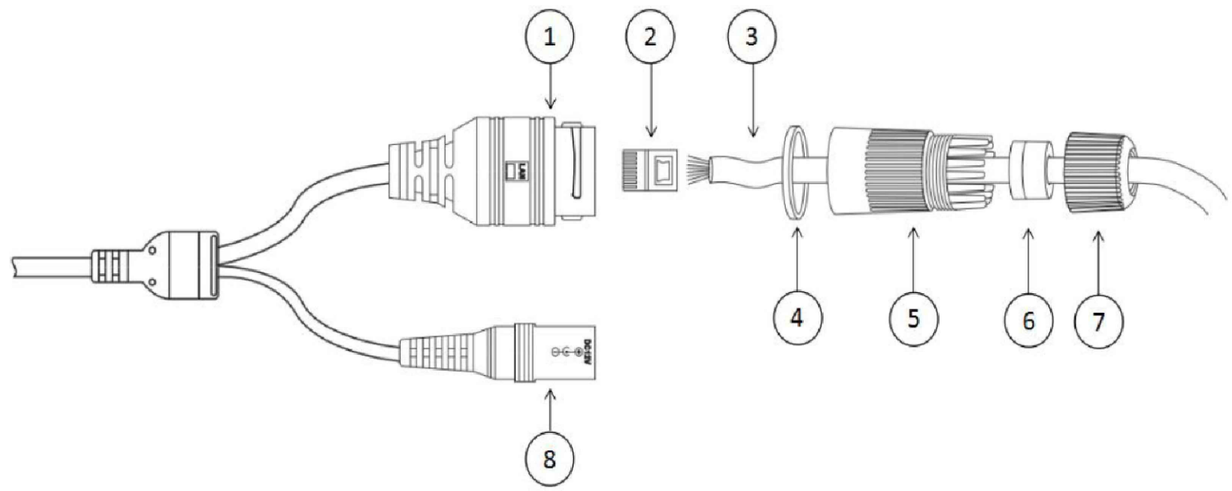

LEGEND:

1. Network port
2. Crystal head
3. Network cable (Belden Y63835 composite)
4. Silicone ring
5. Paw
6. Silica gel pad
7. Hat
8. Power port

NOTES:

1. Network cable installation
   - 1.1. Insert the network cable (3) through the waterproof head kit (4, 5, 6, 7).
   - 1.2. Insert the crystal head (2) and crimp wires into position.
   - 1.3. Insert the crystal into the network port.
   - 1.4. Tighten the head kits (4, 5, 6, 7).
2. Secure the power port (8) with a plastic tie. It is unused since power is supplied via POE.
3. Heat shrink rayolon covering over power and data connectors.
4. Connect opposite end of DVAS camera cable to an RJ-45 connector and plug into an available port on the POE injector (p/n: ws-ps-48v120w).

POE CONNECTOR PIN ASSIGNMENT (MODE B)

PIN #	DESCRIPTION	COLOR	CABLE	SIGNAL
A	Data receive	White/Orange	1140726-B	RX+
B	Data receive	Orange	1140726-B	RX-
C	Data transmit	White/Green	1140726-B	TX+
D	Feeding power (+) OV	Blue	n/a	DC+
E	Feeding power (+) OV	White/Blue	n/a	DC+
F	Data transmit	Green	1140726-B	TX-
G	Feeding power (-) 48 V	White/Brown	n/a	DC-
H	Feeding power (-) 48 V	Brown	n/a	DC-

STATE OF TEXAS - DEPARTMENT OF TRANSPORTATION

CONSULTANT FUNCTIONAL SUPERVISOR ---

CALCULATED-DESIGNED BY T. Hammond

CHECKED BY --

REVISED BY T. Hammond

DATE REVISED 4/10/2017 2:44 PM

DATE/TIME PLOTTED 6/8/2018 11:24 AM

FILENAME NETRMA SEGMENT 4 TOLLING DESIGN.DWG

LAST REVISION 00-00-00

BORDER LAST REVISED 06/08/2018 | RELATIVE BORDER SCALE IS IN INCHES 0 1 2 3 | UNIT --- | PROJECT NUMBER & PHASE --- | SHEET TITLE DVAS Camera Connection Details | SHEET NUMBER PC-011 | SCALE NTS

Dist	COUNTY	ROUTE	POST MILES TOTAL PROJECT	SHEET No.	TOTAL SHEETS
---	Smith	Toll 49	0.0 / 0.0	30	65

REGISTERED ENGINEER DATE

PLANS APPROVAL DATE

THE STATE OF TEXAS OR ITS OFFICERS OR AGENTS SHALL NOT BE RESPONSIBLE FOR THE ACCURACY OR COMPLETENESS OF SCANNED COPIES OF THIS PLAN SHEET.

Kapsch TrafficCom
211 East 7th Street, Suite 800
Austin, Texas 78701

North East Texas Regional Mobility Auth.
909 ESE Loop 323, Suite 360
Tyler, Texas 75701

SIRIT READER POWER WIRING DETAIL

PAIR	PIN	COLOR	PIN NAME	FUNCTION
1	A	Wht/Org	TX+	Ethernet
	B	Orange	TX-	Ethernet
2	C	Wht/Grn	RX+	Ethernet
	D	Green	RX-	Ethernet
3	E	Blue	VC1+	ETHERNET
	F	Black	VC1-	ETHERNET
4	G	Black	VC2+	ETHERNET
	H	Brown	VC2-	ETHERNET
5	J	BLACK	RS-232 TXD	SERIAL
	K	RED	RS-232 RXD	SERIAL
6	L	BLACK	DTR	SERIAL
	M	WHITE	RS-232 GND	SERIAL
7	N	BLACK	DSR	SERIAL
	P	YELLOW	RS-232 CTS	SERIAL
8	R	RED	RS-232 CTS	SERIAL
	S	WHITE	NOT USED	NOT USED

SIRIT READER POWER WIRING DETAIL

PAIR	PIN	COLOR	PIN NAME	FUNCTION
9	T	Orange	+24 VDC	Power
	U	Black	24 VDC GND	Ground
10	V	RED	DIN REF 1	DI COMMON
	W	BLUE	DIN1	DIGITAL INPUT 1
11	X	RED	DIN2	DIGITAL INPUT 2
	Y	YELLOW	DIN REF 2	DI COMMON
12	Z	RED	DIN3	DIGITAL INPUT 3
	a	BROWN	DIN4	DIGITAL INPUT 4
13	b	RED	GND	GND (READER)
	c	ORANGE	DOUT1	DIGITAL OUTPUT 1
14	d	GREEN	DOUT2	DIGITAL OUTPUT 2
	e	WHITE	DOUT3	DIGITAL OUTPUT 3
15	f	GREEN	DOUT4	DIGITAL OUTPUT 4
	g	BLUE	GND	GND (READER)
16	h	YELLOW	+24 VDC	HEATER POWER
	j	GREEN	24 VDC GND	HEATER GROUND

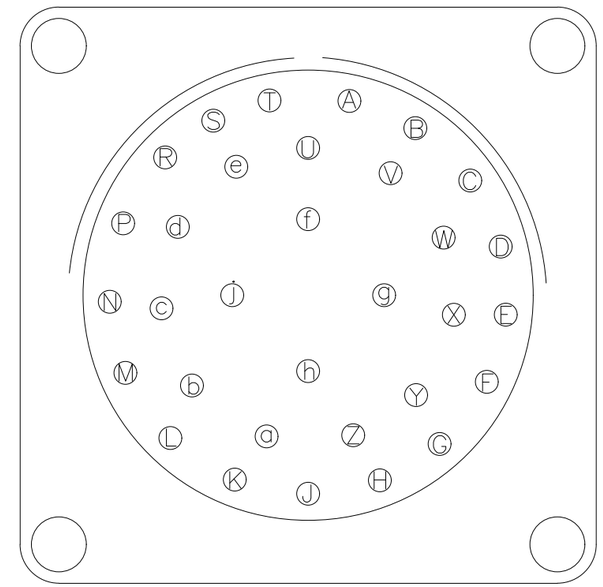

POWER, RS-232
AND ETHERNET
CONNECTOR DETAIL

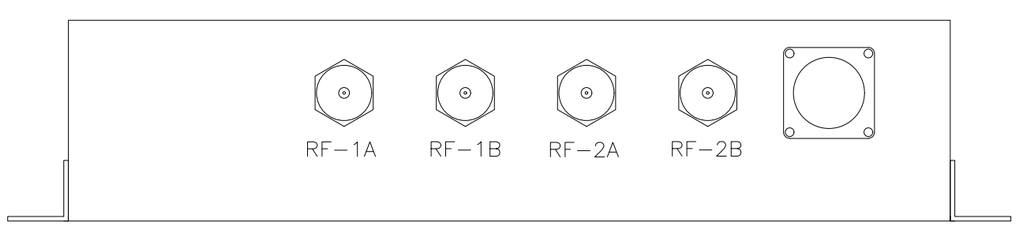

AVI READER CONNECTOR
DETAIL

NOTES:

1. Connect Neology's 2-meter cable cannon plug to reader.
2. Connect pair 9 of 2-meter cable to 24 VDC power source as directed in low voltage connection tables.
3. Connect CAT-6 cable to 2-meter cable CAT-6 male receptacle.
4. Connect one end of LMR cable to reader RF port.
5. Connect other end of LMR cable to antenna.

STATE OF TEXAS - DEPARTMENT OF TRANSPORTATION

CONSULTANT FUNCTIONAL SUPERVISOR ...

CALCULATED-DESIGNED BY T. Hammond

CHECKED BY --

REVISED BY T. Hammond

DATE REVISED 4/10/2017 2:44 PM

DATE/TIME PLOTTED 6/8/2018 11:24 AM

FILENAME NETRMA SEGMENT 4 TOLLING DESIGN.DWG

LAST REVISION 00-00-00

BORDER LAST REVISED 06/08/2018 | RELATIVE BORDER SCALE IS IN INCHES 0 1 2 3 | UNIT --- | PROJECT NUMBER & PHASE --- | SHEET TITLE AVI Antenna Connection Details | SHEET NUMBER PC-012 | SCALE NTS

Dist	COUNTY	ROUTE	POST MILES TOTAL PROJECT	SHEET No.	TOTAL SHEETS
---	Smith	Toll 49	0.0 / 0.0	31	65

REGISTERED ENGINEER DATE

PLANS APPROVAL DATE

THE STATE OF TEXAS OR ITS OFFICERS OR AGENTS SHALL NOT BE RESPONSIBLE FOR THE ACCURACY OR COMPLETENESS OF SCANNED COPIES OF THIS PLAN SHEET.

Kapsch TrafficCom
211 East 7th Street, Suite 800
Austin, Texas 78701

North East Texas Regional Mobility Auth.
909 ESE Loop 323, Suite 360
Tyler, Texas 75701

NOTES:

1. Schematic shown is typical. See the low voltage wiring tables for connections to specific terminal blocks.
2. Note that the loops are wired to the SNAP module OPPOSITE the way the treadles are wired. The loops send IDC5 channels 2, 4, 6 and 8 to POSITIVE 5 VDC.
3. Install loop cards in Northstar rack and number from left to right (card one on the left, card two on the right). the cards cannot be installed in adjacent slots.

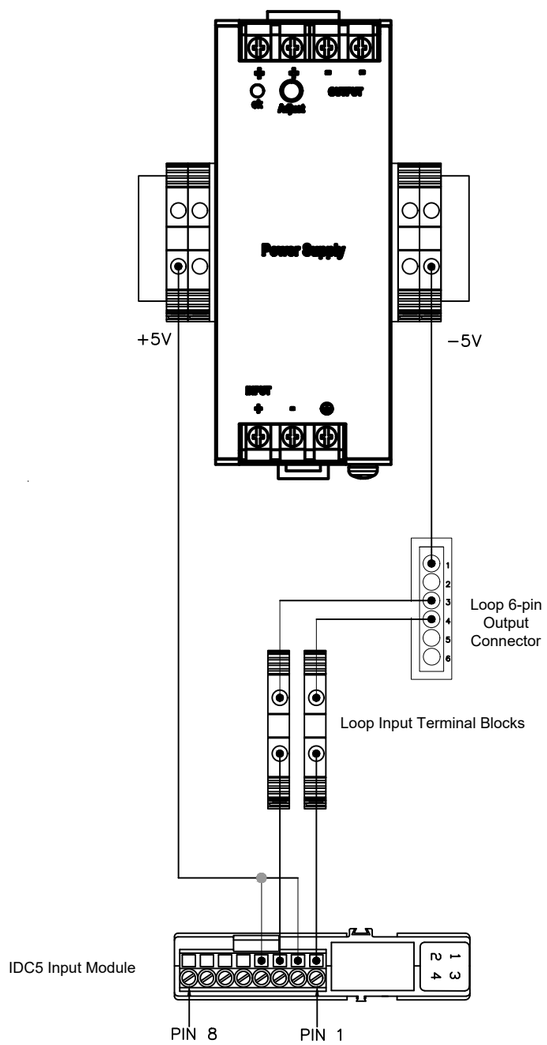

NRI-10 Power Input		
PIN NAME	PIN #	PIN USE
Unused	1	Unused
Ground	2	Ground
Unused	3	Unused
Neutral	4	Neutral
Earth	5	Earth
Line	6	240 VAC

LOOP INPUT WIRING (8-PIN)					
LANE #	LOOP CARD #	PIN NAME	PIN #	PIN USE	LOOP
1	1	Loop 1	1	Loop input	Entry
		Loop 1	2	Loop input	Entry
		Loop 2	3	Loop input	Exit
		Loop 2	4	Loop input	Exit
5	2	Loop 1	1	Loop input	Entry
		Loop 1	2	Loop input	Entry
		Loop 2	3	Loop input	Exit
		Loop 2	4	Loop input	Exit

LOOP OUTPUT WIRING (6-PIN)				
LANE #	LOOP CARD #	PIN NAME	PIN #	PIN USE
1	1	Gnd	1	Ground (-5 VDC)
		Reset	2	Reset
		Ch. 1 Dis	3	Ch. 1 Discrete
		Ch. 2 Dis	4	Ch. 2 Discrete
		Ch. 3 Dis	5	Ch. 3 Discrete
		Ch. 4 Dis	6	Ch. 4 Discrete
5	2	Gnd	1	Ground (-5 VDC)
		Reset	2	Reset
		Ch. 1 Dis	3	Ch. 1 Discrete
		Ch. 2 Dis	4	Ch. 2 Discrete
		Ch. 3 Dis	5	Ch. 3 Discrete
		Ch. 4 Dis	6	Ch. 4 Discrete

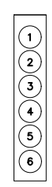

Detail A
NRI-10 Loop Rack
6-pin Power Connector

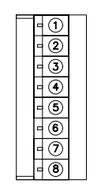

Detail B
NRI-10 Loop Rack
8-pin Loop Input Connector

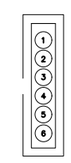

Detail C
NRI-10 Loop Rack
6-pin Output Connector

STATE OF TEXAS – DEPARTMENT OF TRANSPORTATION

CONSULTANT FUNCTIONAL SUPERVISOR ---

CALCULATED–DESIGNED BY T. Hammond

CHECKED BY --

REVISED BY T. Hammond

DATE REVISED 4/10/2017 2:44 PM

DATE/TIME PLOTTED 6/8/2018 11:24 AM

FILENAME NETRMA SEGMENT 4 TOLLING DESIGN.DWG

LAST REVISION 00-00-00

BORDER LAST REVISED 06/08/2018 | RELATIVE BORDER SCALE IS IN INCHES 0 1 2 3 | UNIT --- | PROJECT NUMBER & PHASE --- | SHEET TITLE AVDC Loop Connection Details | SHEET NUMBER PC-013 | SCALE NTS

Dist	COUNTY	ROUTE	POST MILES TOTAL PROJECT	SHEET No.	TOTAL SHEETS
---	Smith	Toll 49	0.0 / 0.0	32	65

REGISTERED ENGINEER DATE

PLANS APPROVAL DATE

THE STATE OF TEXAS OR ITS OFFICERS OR AGENTS SHALL NOT BE RESPONSIBLE FOR THE ACCURACY OR COMPLETENESS OF SCANNED COPIES OF THIS PLAN SHEET.

Kapsch TrafficCom
211 East 7th Street, Suite 800
Austin, Texas 78701

North East Texas Regional Mobility Auth.
909 ESE Loop 323, Suite 360
Tyler, Texas 75701

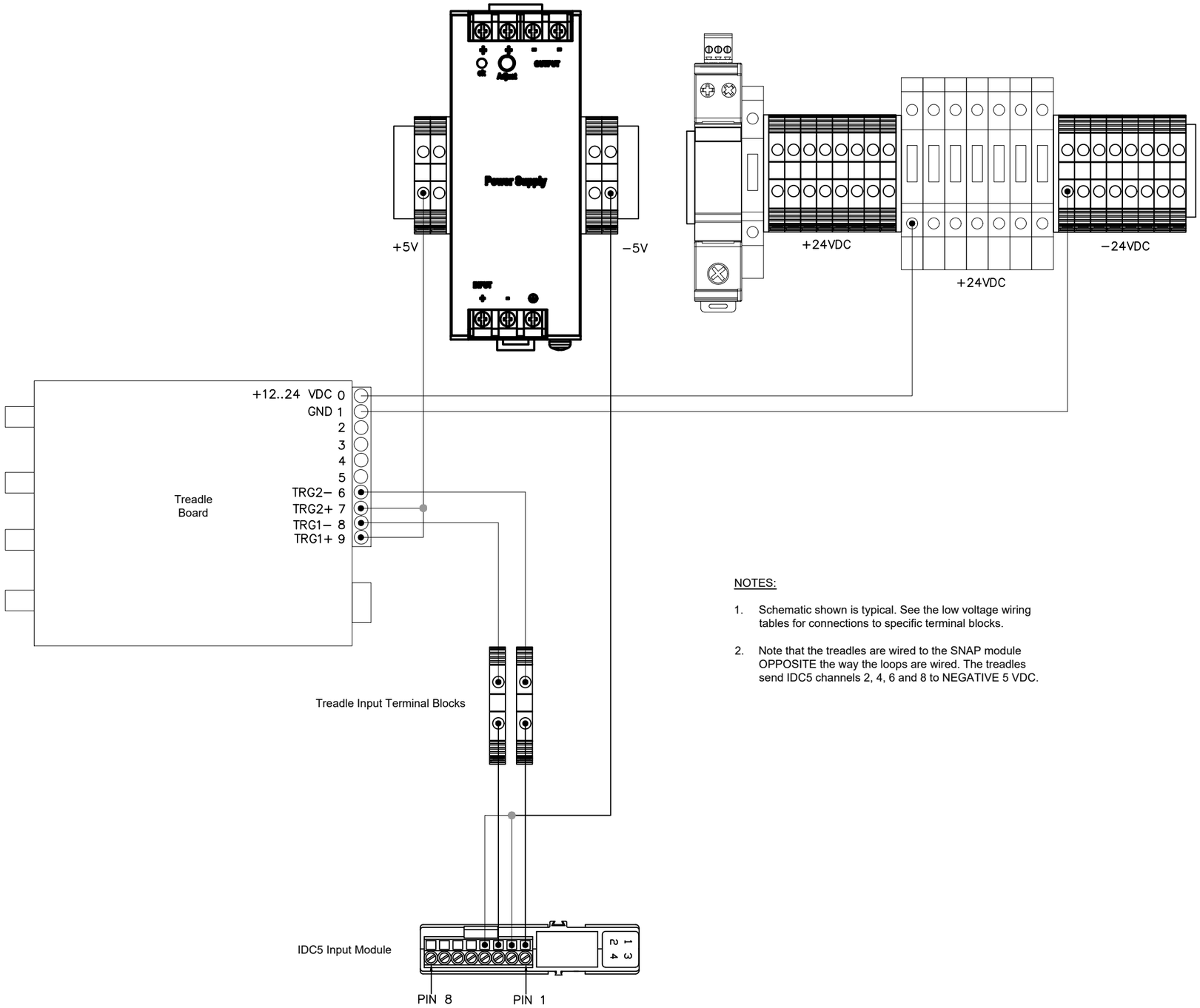

NOTES:

1. Schematic shown is typical. See the low voltage wiring tables for connections to specific terminal blocks.
2. Note that the treadles are wired to the SNAP module OPPOSITE the way the loops are wired. The treadles send IDC5 channels 2, 4, 6 and 8 to NEGATIVE 5 VDC.

STATE OF TEXAS – DEPARTMENT OF TRANSPORTATION

CONSULTANT FUNCTIONAL SUPERVISOR ---

CALCULATED–DESIGNED BY T. Hammond

CHECKED BY --

REVISED BY T. Hammond

DATE REVISED 4/10/2017 2:44 PM

DATE/TIME PLOTTED 6/8/2018 11:24 AM

FILENAME NETRMA SEGMENT 4 TOLLING DESIGN.DWG

LAST REVISION 00-00-00

BORDER LAST REVISED 06/08/2018 | RELATIVE BORDER SCALE IS IN INCHES 0 1 2 3 | UNIT --- | PROJECT NUMBER & PHASE --- | SHEET TITLE AVDC Treadle Connection Details | SHEET NUMBER PC-014 | SCALE NTS

Dist	COUNTY	ROUTE	POST MILES TOTAL PROJECT	SHEET No.	TOTAL SHEETS
---	Smith	Toll 49	0.0 / 0.0	33	65

REGISTERED ENGINEER DATE

PLANS APPROVAL DATE

THE STATE OF TEXAS OR ITS OFFICERS OR AGENTS SHALL NOT BE RESPONSIBLE FOR THE ACCURACY OR COMPLETENESS OF SCANNED COPIES OF THIS PLAN SHEET.

Kapsch TrafficCom
211 East 7th Street, Suite 800
Austin, Texas 78701

North East Texas Regional Mobility Auth.
909 ESE Loop 323, Suite 360
Tyler, Texas 75701

This sheet intentionally left blank

STATE OF TEXAS - DEPARTMENT OF TRANSPORTATION	CONSULTANT FUNCTIONAL SUPERVISOR	CALCULATED-DESIGNED BY	T. Hammond	REVISED BY	T. Hammond
	---	CHECKED BY	---	DATE REVISED	4/10/2017 2:44 PM

DATE/TIME PLOTTED 6/8/2018 11:24 AM

FILENAME NETRMA SEGMENT 4 TOLLING DESIGN.DWG

LAST REVISION 00-00-00

Dist	COUNTY	ROUTE	POST MILES TOTAL PROJECT	SHEET No.	TOTAL SHEETS
---	Smith	Toll 49	0.0 / 0.0	34	65

REGISTERED ENGINEER DATE

PLANS APPROVAL DATE

THE STATE OF TEXAS OR ITS OFFICERS OR AGENTS SHALL NOT BE RESPONSIBLE FOR THE ACCURACY OR COMPLETENESS OF SCANNED COPIES OF THIS PLAN SHEET.

Kapsch TrafficCom
211 East 7th Street, Suite 800
Austin, Texas 78701

North East Texas Regional Mobility Auth.
909 ESE Loop 323, Suite 360
Tyler, Texas 75701

This sheet intentionally left blank

STATE OF TEXAS - DEPARTMENT OF TRANSPORTATION

CONSULTANT FUNCTIONAL SUPERVISOR	CALCULATED-DESIGNED BY	T. Hammond	REVISED BY	T. Hammond
---	CHECKED BY	---	DATE REVISED	4/10/2017 2:44 PM

DATE/TIME PLOTTED 6/8/2018 11:24 AM

FILENAME NETRMA SEGMENT 4 TOLLING DESIGN.DWG

LAST REVISION 00-00-00

BORDER LAST REVISED 06/08/2018 | RELATIVE BORDER SCALE IS IN INCHES 0 1 2 3 | UNIT --- | PROJECT NUMBER & PHASE --- | SHEET TITLE System Network Diagram - Top Level | SHEET NUMBER PC-016 | SCALE NTS

Dist	COUNTY	ROUTE	POST MILES TOTAL PROJECT	SHEET No.	TOTAL SHEETS
---	Smith	Toll 49	0.0 / 0.0	35	65

REGISTERED ENGINEER DATE

PLANS APPROVAL DATE

THE STATE OF TEXAS OR ITS OFFICERS OR AGENTS SHALL NOT BE RESPONSIBLE FOR THE ACCURACY OR COMPLETENESS OF SCANNED COPIES OF THIS PLAN SHEET.

Kapsch TrafficCom
211 East 7th Street, Suite 800
Austin, Texas 78701

North East Texas Regional Mobility Auth.
909 ESE Loop 323, Suite 360
Tyler, Texas 75701

This sheet intentionally left blank

STATE OF TEXAS - DEPARTMENT OF TRANSPORTATION

CONSULTANT FUNCTIONAL SUPERVISOR	CALCULATED-DESIGNED BY	T. Hammond	REVISED BY	T. Hammond
---	CHECKED BY	---	DATE REVISED	4/10/2017 2:44 PM

DATE/TIME PLOTTED 6/8/2018 11:24 AM

FILENAME NETRMA SEGMENT 4 TOLLING DESIGN.DWG

LAST REVISION 00-00-00

Dist	COUNTY	ROUTE	POST MILES TOTAL PROJECT	SHEET No.	TOTAL SHEETS
---	Smith	Toll 49	0.0 / 0.0	36	65

REGISTERED ENGINEER DATE

PLANS APPROVAL DATE

THE STATE OF TEXAS OR ITS OFFICERS OR AGENTS SHALL NOT BE RESPONSIBLE FOR THE ACCURACY OR COMPLETENESS OF SCANNED COPIES OF THIS PLAN SHEET.

Kapsch TrafficCom
211 East 7th Street, Suite 800
Austin, Texas 78701

North East Texas Regional Mobility Auth.
909 ESE Loop 323, Suite 360
Tyler, Texas 75701

This sheet intentionally left blank

STATE OF TEXAS - DEPARTMENT OF TRANSPORTATION

CONSULTANT FUNCTIONAL SUPERVISOR	CALCULATED-DESIGNED BY	T. Hammond	REVISED BY	T. Hammond
---	CHECKED BY	---	DATE REVISED	4/10/2017 2:44 PM

DATE/TIME PLOTTED 6/8/2018 11:24 AM

FILENAME NETRMA SEGMENT 4 TOLLING DESIGN.DWG

LAST REVISION 00-00-00

BORDER LAST REVISED 06/08/2018 | RELATIVE BORDER SCALE IS IN INCHES 0 1 2 3 | UNIT --- | PROJECT NUMBER & PHASE --- | SHEET TITLE System Network Diagram - 3 | SHEET NUMBER PC-018 | SCALE NTS

Dist	COUNTY	ROUTE	POST MILES TOTAL PROJECT	SHEET No.	TOTAL SHEETS
---	Smith	Toll 49	0.0 / 0.0	37	65

REGISTERED ENGINEER DATE

PLANS APPROVAL DATE

THE STATE OF TEXAS OR ITS OFFICERS OR AGENTS SHALL NOT BE RESPONSIBLE FOR THE ACCURACY OR COMPLETENESS OF SCANNED COPIES OF THIS PLAN SHEET.

Kapsch TrafficCom
211 East 7th Street, Suite 800
Austin, Texas 78701

North East Texas Regional Mobility Auth.
909 ESE Loop 323, Suite 360
Tyler, Texas 75701

This sheet intentionally left blank

STATE OF TEXAS - DEPARTMENT OF TRANSPORTATION

CONSULTANT FUNCTIONAL SUPERVISOR	CALCULATED-DESIGNED BY	T. Hammond	REVISED BY	T. Hammond
---	CHECKED BY	---	DATE REVISED	4/10/2017 2:44 PM

DATE/TIME PLOTTED 6/8/2018 11:24 AM

FILENAME NETRMA SEGMENT 4 TOLLING DESIGN.DWG

LAST REVISION 00-00-00

BORDER LAST REVISED 06/08/2018 | RELATIVE BORDER SCALE IS IN INCHES 0 1 2 3 | UNIT --- | PROJECT NUMBER & PHASE --- | SHEET TITLE System Network Diagram - 4 | SHEET NUMBER PC-019 | SCALE NTS

Dist	COUNTY	ROUTE	POST MILES TOTAL PROJECT	SHEET No.	TOTAL SHEETS
---	Smith	Toll 49	0.0 / 0.0	38	65

REGISTERED ENGINEER DATE

PLANS APPROVAL DATE

THE STATE OF TEXAS OR ITS OFFICERS OR AGENTS SHALL NOT BE RESPONSIBLE FOR THE ACCURACY OR COMPLETENESS OF SCANNED COPIES OF THIS PLAN SHEET.

Kapsch TrafficCom
211 East 7th Street, Suite 800
Austin, Texas 78701

North East Texas Regional Mobility Auth.
909 ESE Loop 323, Suite 360
Tyler, Texas 75701

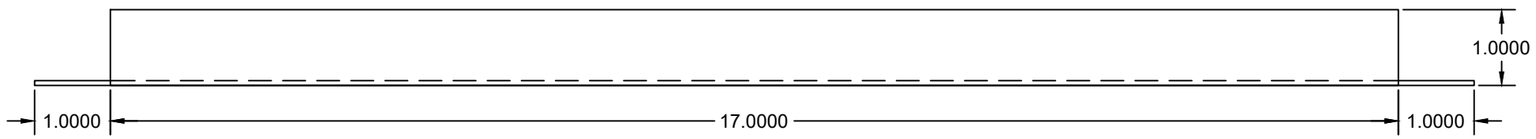

Plan View
Rack Mount
Northstar NRI-10 Loop Rack

NOTES:

1. Material is 16 gauge stainless steel.
2. All dimensions are in inches.

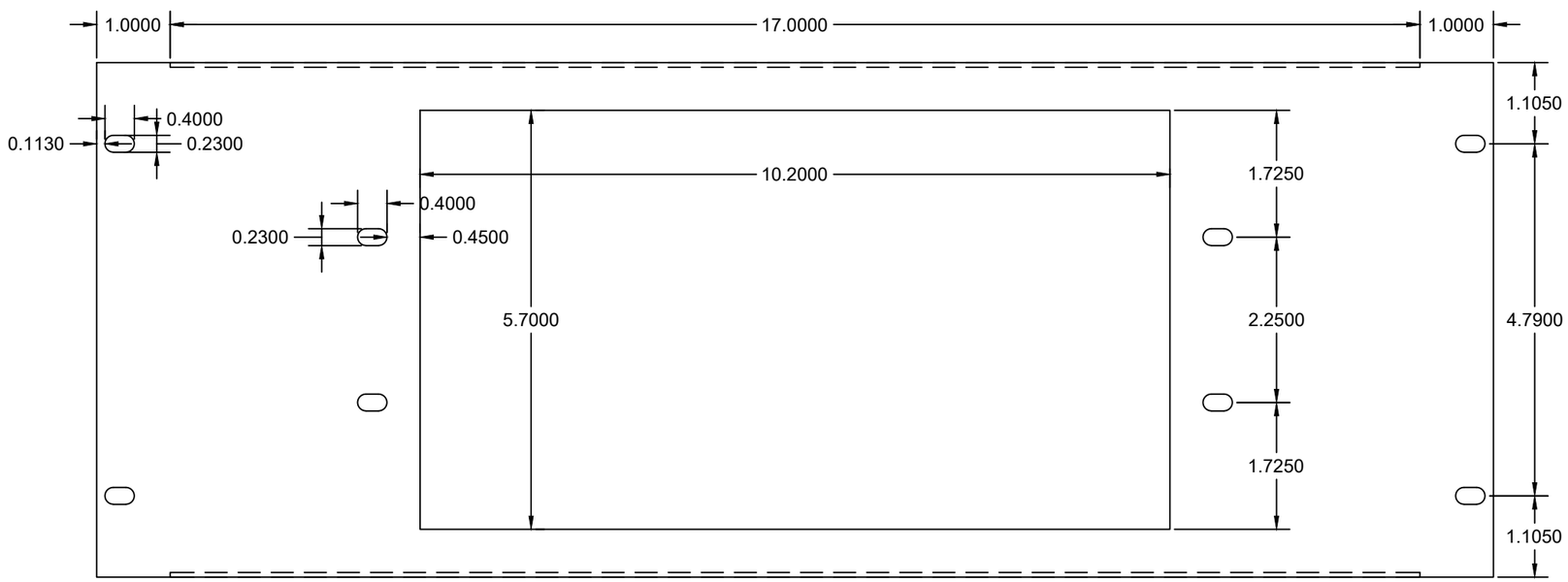

Elevation View
Rack Mount
Northstar NRI-10 Loop Rack

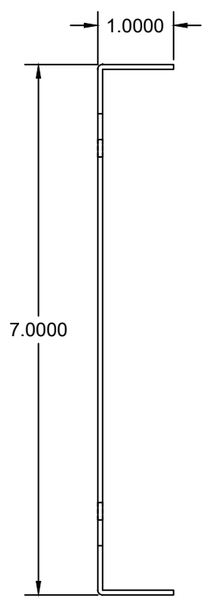

Profile View
Rack Mount
Northstar NRI-10 Loop Rack

STATE OF TEXAS - DEPARTMENT OF TRANSPORTATION

CONSULTANT FUNCTIONAL SUPERVISOR ---

CALCULATED-DESIGNED BY T. Hammond

CHECKED BY --

REVISED BY T. Hammond

DATE REVISED 4/10/2017 2:44 PM

DATE/TIME PLOTTED 6/8/2018 11:24 AM

FILENAME NETRMA SEGMENT 4 TOLLING DESIGN.DWG

LAST REVISION 00-00-00

BORDER LAST REVISED 06/08/2018 | RELATIVE BORDER SCALE IS IN INCHES 0 1 2 3 | UNIT --- | PROJECT NUMBER & PHASE --- | SHEET TITLE NRI-10 Rack Mount | SHEET NUMBER PC-020 | SCALE 6" = 1'-0"

Dist	COUNTY	ROUTE	POST MILES TOTAL PROJECT	SHEET No.	TOTAL SHEETS
---	Smith	Toll 49	0.0 / 0.0	39	65

REGISTERED ENGINEER DATE

PLANS APPROVAL DATE

THE STATE OF TEXAS OR ITS OFFICERS OR AGENTS SHALL NOT BE RESPONSIBLE FOR THE ACCURACY OR COMPLETENESS OF SCANNED COPIES OF THIS PLAN SHEET.

Kapsch TrafficCom
211 East 7th Street, Suite 800
Austin, Texas 78701

North East Texas Regional Mobility Auth.
909 ESE Loop 323, Suite 360
Tyler, Texas 75701

NOTES:

1. Applicable standards / specifications: ANSI/ASME Y14.5 - 1994.
2. Material is 16-gauge stainless steel.
3. All bends and reliefs to be kept minimum.
4. Deburr and remove all sharp edges.

Component Panel
Elevation

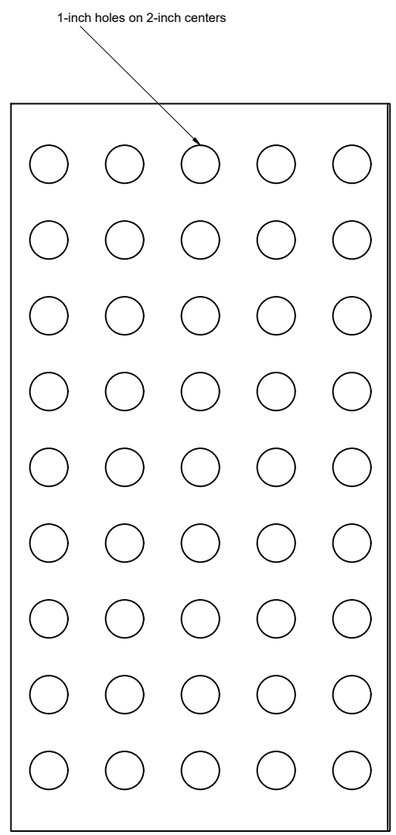

Component Panel
Left Side

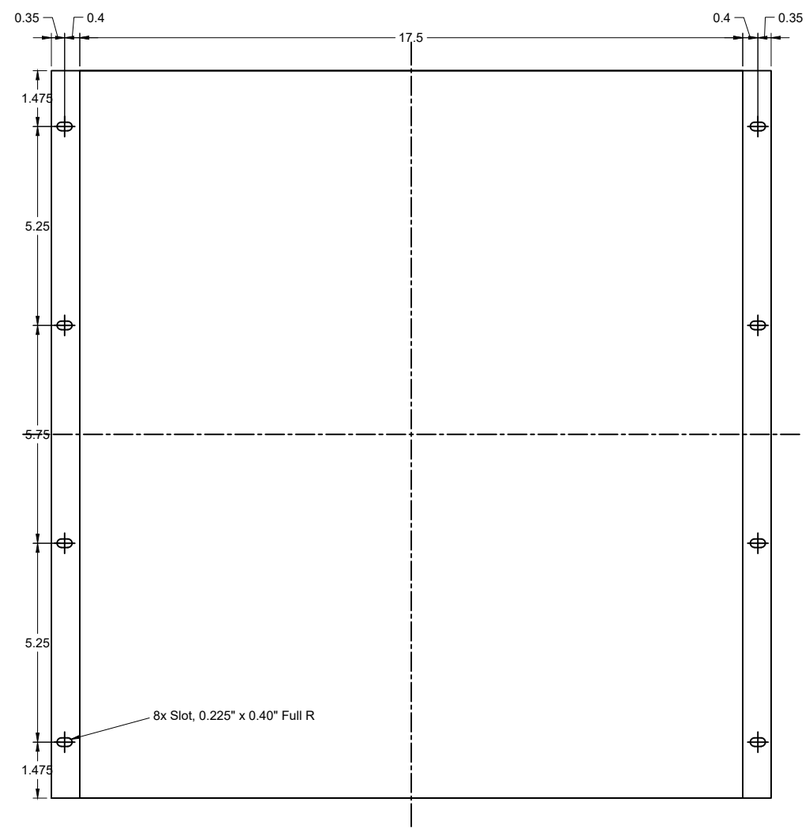

Component Panel
Front

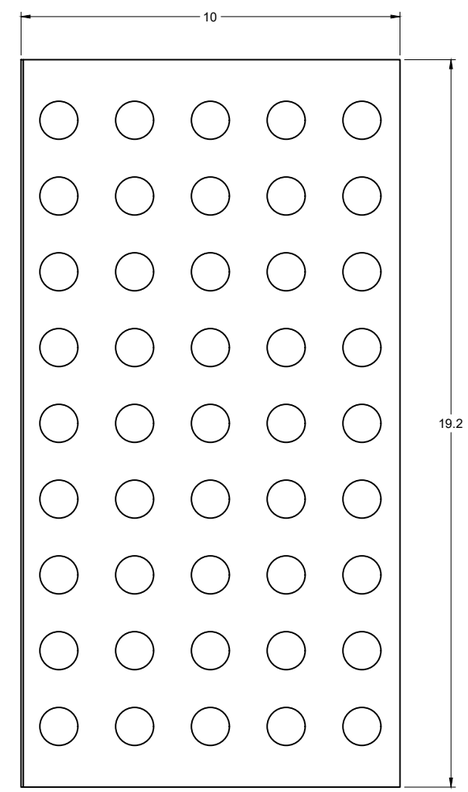

Component Panel
Right Side

STATE OF TEXAS - DEPARTMENT OF TRANSPORTATION

CONSULTANT FUNCTIONAL SUPERVISOR ---

CALCULATED-DESIGNED BY T. Hammond

CHECKED BY --

REVISED BY T. Hammond

DATE REVISED 4/10/2017 2:44 PM

DATE/TIME PLOTTED 6/8/2018 11:24 AM

FILENAME NETRMA SEGMENT 4 TOLLING DESIGN.DWG

LAST REVISION 00-00-00

BORDER LAST REVISED 06/08/2018 | RELATIVE BORDER SCALE IS IN INCHES 0 1 2 3 | UNIT --- | PROJECT NUMBER & PHASE --- | SHEET TITLE Component Panel Design | SHEET NUMBER PC-021 | SCALE 3" = 1'-0"

Dist	COUNTY	ROUTE	POST MILES TOTAL PROJECT	SHEET No.	TOTAL SHEETS
---	Smith	Toll 49	0.0 / 0.0	40	65

REGISTERED ENGINEER DATE

PLANS APPROVAL DATE

THE STATE OF TEXAS OR ITS OFFICERS OR AGENTS SHALL NOT BE RESPONSIBLE FOR THE ACCURACY OR COMPLETENESS OF SCANNED COPIES OF THIS PLAN SHEET.

Kapsch TrafficCom
211 East 7th Street, Suite 800
Austin, Texas 78701

North East Texas Regional Mobility Auth.
909 ESE Loop 323, Suite 360
Tyler, Texas 75701

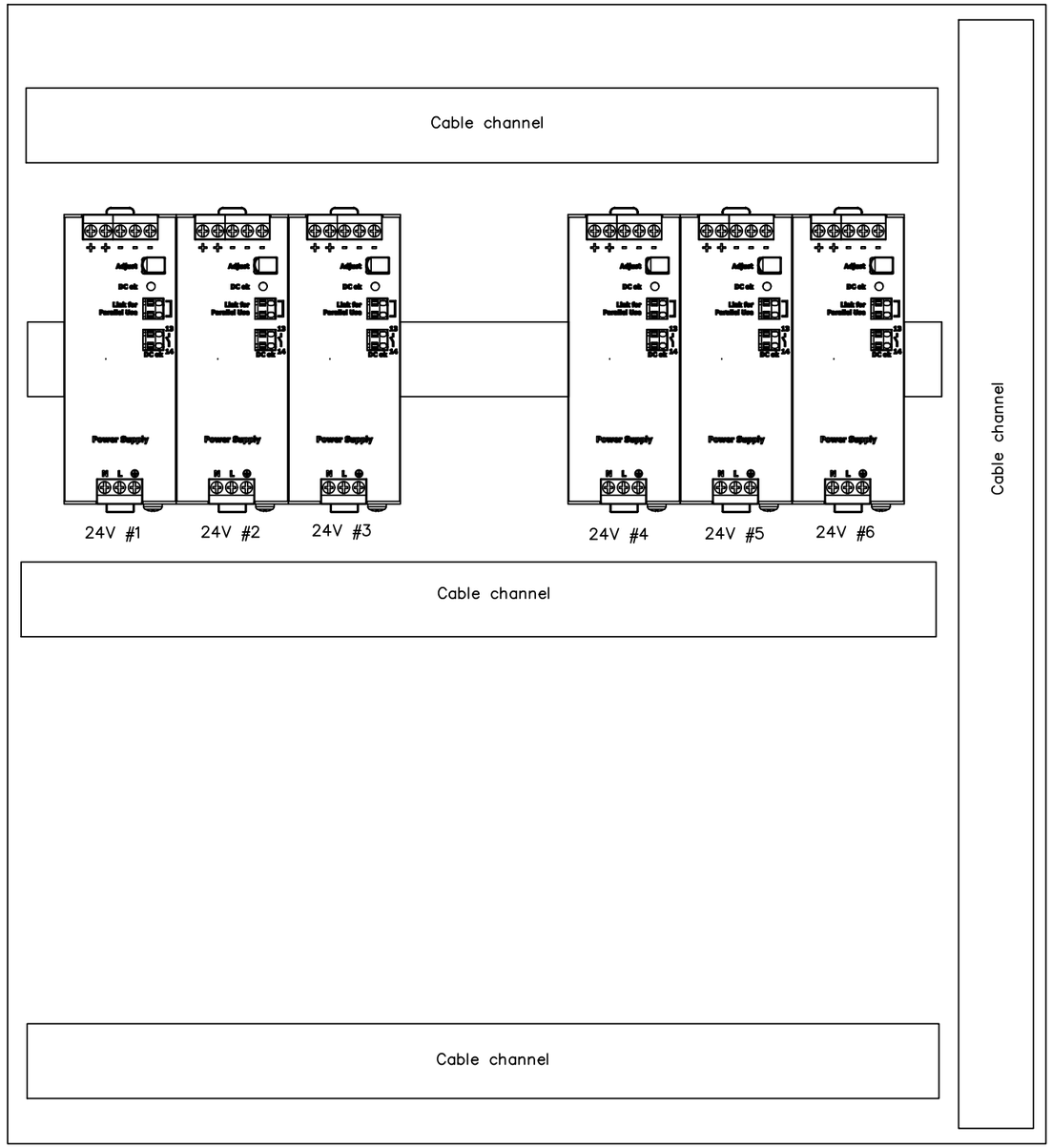

NOTES:

1. Position and mount the cable channels as shown. Additional vertical cable channels can be mounted on the side(s) of the component panel as well if needed.
2. Position power supplies as shown and attach to the din rails.
3. See high voltage connection detail sheet(s) for wiring connections.

STATE OF TEXAS - DEPARTMENT OF TRANSPORTATION

CONSULTANT FUNCTIONAL SUPERVISOR: ---

CALCULATED-DESIGNED BY: T. Hammond
CHECKED BY: --

REVISED BY: T. Hammond
DATE REVISED: 4/10/2017 2:44 PM

DATE/TIME PLOTTED 6/8/2018 11:24 AM

FILENAME NETRMA SEGMENT 4 TOLLING DESIGN.DWG

LAST REVISION 00-00-00

BORDER LAST REVISED 06/08/2018 | RELATIVE BORDER SCALE IS IN INCHES 0 1 2 3 | UNIT --- | PROJECT NUMBER & PHASE --- | SHEET TITLE Power Component Panel Details | SHEET NUMBER PC-022 | SCALE NTS

Dist	COUNTY	ROUTE	POST MILES TOTAL PROJECT	SHEET No.	TOTAL SHEETS
---	Smith	Toll 49	0.0 / 0.0	41	65

REGISTERED ENGINEER DATE

PLANS APPROVAL DATE

THE STATE OF TEXAS OR ITS OFFICERS OR AGENTS SHALL NOT BE RESPONSIBLE FOR THE ACCURACY OR COMPLETENESS OF SCANNED COPIES OF THIS PLAN SHEET.

Kapsch TrafficCom
211 East 7th Street, Suite 800
Austin, Texas 78701

North East Texas Regional Mobility Auth.
909 ESE Loop 323, Suite 360
Tyler, Texas 75701

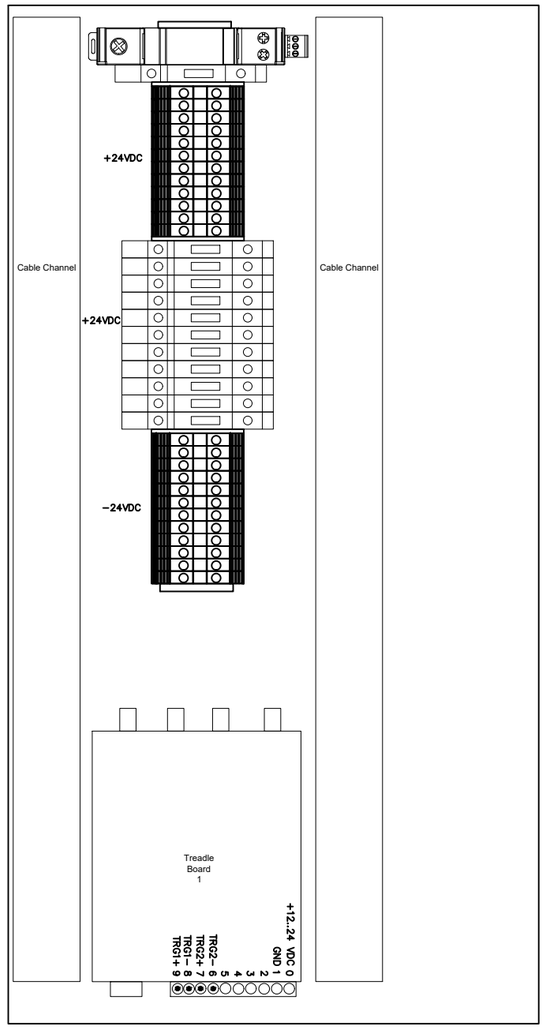

Left Side Panel

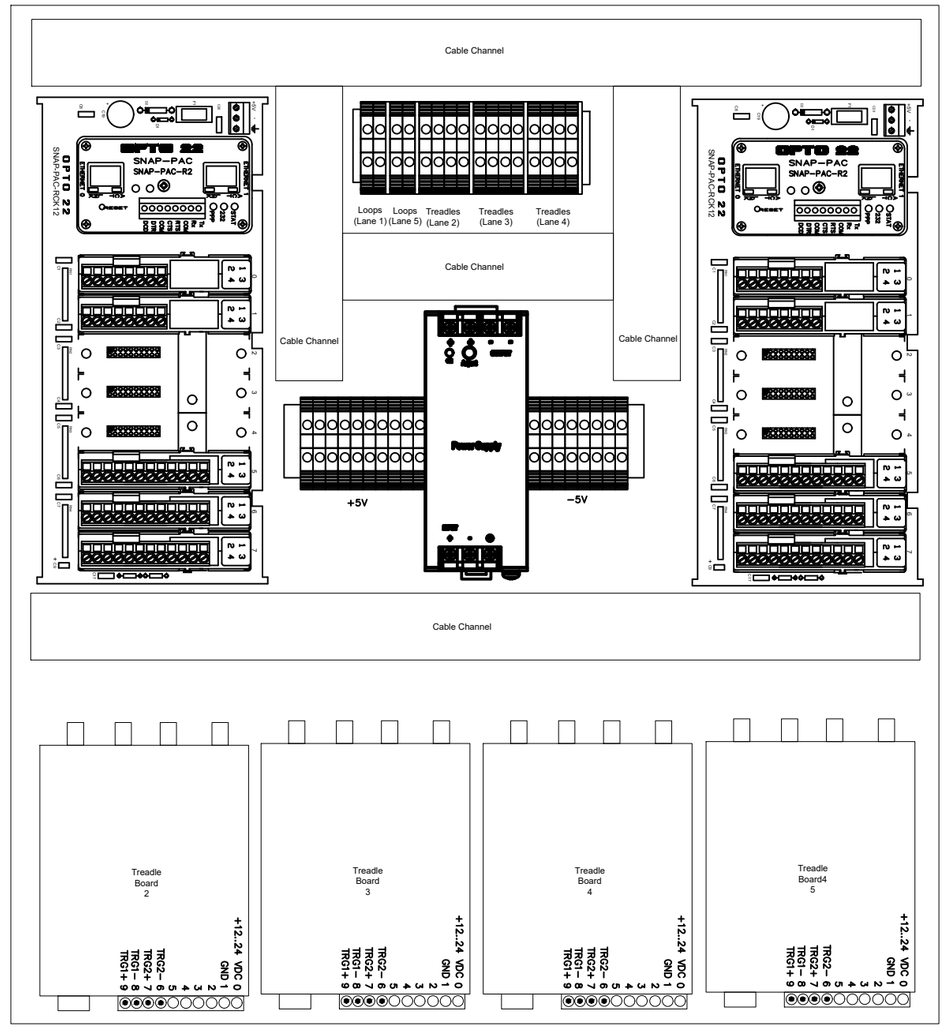

Back Panel

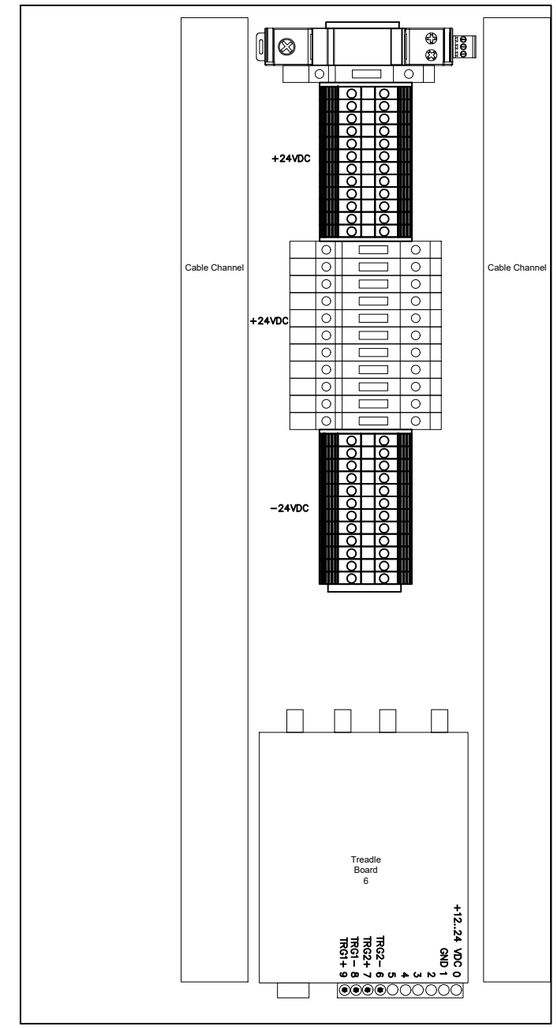

Right Side Panel

STATE OF TEXAS - DEPARTMENT OF TRANSPORTATION	CONSULTANT FUNCTIONAL SUPERVISOR	CALCULATED-DESIGNED BY	T. Hammond
	---	CHECKED BY	---
		REVISED BY	T. Hammond
		DATE REVISED	4/10/2017 2:44 PM

DATE/TIME PLOTTED 6/8/2018 11:24 AM

FILENAME NETRMA SEGMENT 4 TOLLING DESIGN.DWG

LAST REVISION 00-00-00

BORDER LAST REVISED 06/08/2018 | RELATIVE BORDER SCALE IS IN INCHES 0 1 2 3 | UNIT --- | PROJECT NUMBER & PHASE --- | SHEET TITLE I-O Component Panel Details - Mainlane | SHEET NUMBER PC-023 | SCALE NTS

Dist	COUNTY	ROUTE	POST MILES TOTAL PROJECT	SHEET No.	TOTAL SHEETS
---	Smith	Toll 49	0.0 / 0.0	42	65

REGISTERED ENGINEER DATE

PLANS APPROVAL DATE

THE STATE OF TEXAS OR ITS OFFICERS OR AGENTS SHALL NOT BE RESPONSIBLE FOR THE ACCURACY OR COMPLETENESS OF SCANNED COPIES OF THIS PLAN SHEET.

Kapsch TrafficCom
211 East 7th Street, Suite 800
Austin, Texas 78701

North East Texas Regional Mobility Auth.
909 ESE Loop 323, Suite 360
Tyler, Texas 75701

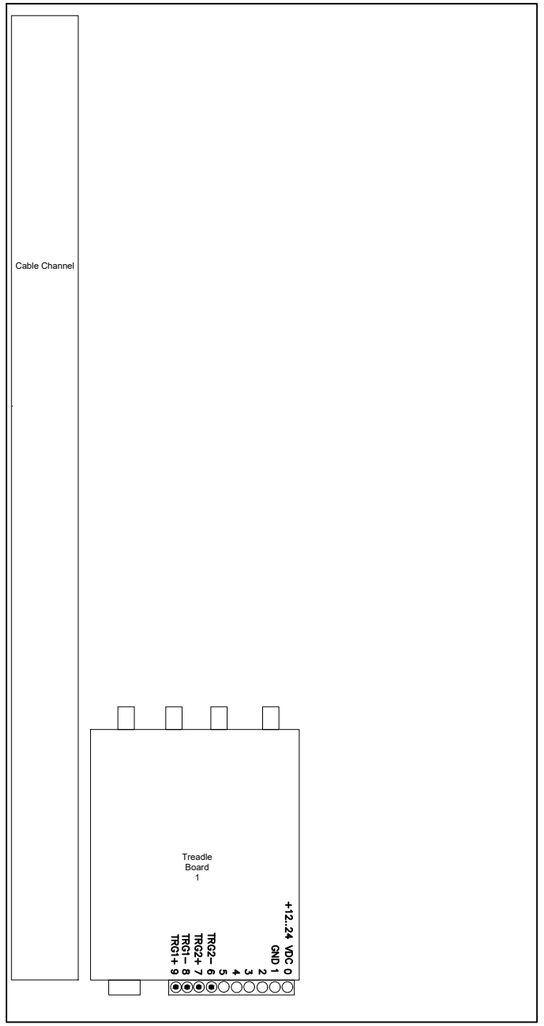

Left Side Panel

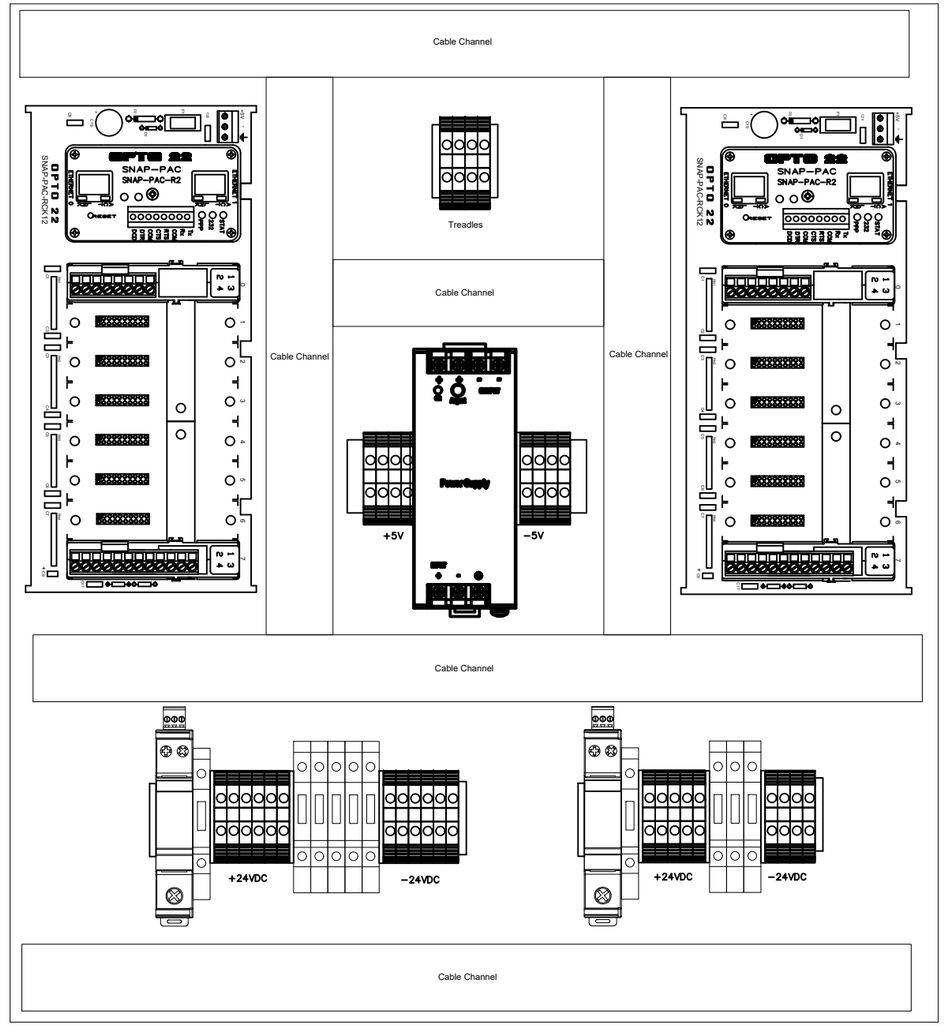

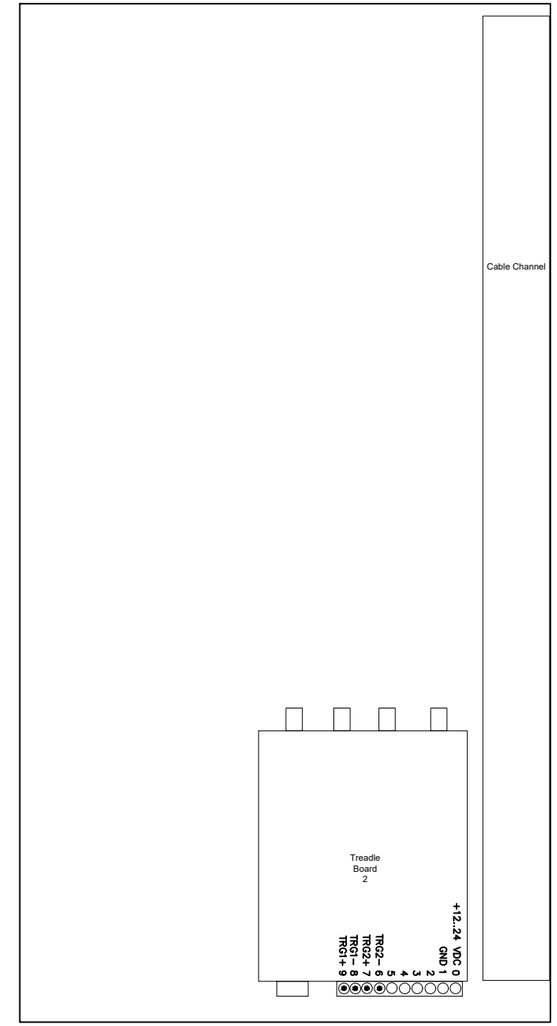

Right Side Panel

STATE OF TEXAS – DEPARTMENT OF TRANSPORTATION

CONSULTANT FUNCTIONAL SUPERVISOR ---

CALCULATED-DESIGNED BY T. Hammond

CHECKED BY ---

REVISED BY T. Hammond

DATE REVISED 4/10/2017 2:44 PM

DATE/TIME PLOTTED 6/8/2018 11:24 AM

FILENAME NETRMA SEGMENT 4 TOLLING DESIGN.DWG

LAST REVISION 00-00-00

BORDER LAST REVISED 06/08/2018 | RELATIVE BORDER SCALE IS IN INCHES 0 1 2 3 | UNIT --- | PROJECT NUMBER & PHASE --- | SHEET TITLE I-O Component Panel Details - Ramp | SHEET NUMBER PC-024 | SCALE NTS

Dist	COUNTY	ROUTE	POST MILES TOTAL PROJECT	SHEET No.	TOTAL SHEETS
---	Smith	Toll 49	0.0 / 0.0	43	65

REGISTERED ENGINEER DATE

PLANS APPROVAL DATE

THE STATE OF TEXAS OR ITS OFFICERS OR AGENTS SHALL NOT BE RESPONSIBLE FOR THE ACCURACY OR COMPLETENESS OF SCANNED COPIES OF THIS PLAN SHEET.

Kapsch TrafficCom
211 East 7th Street, Suite 800
Austin, Texas 78701

North East Texas Regional Mobility Auth.
909 ESE Loop 323, Suite 360
Tyler, Texas 75701

ROADSIDE CABINET PDU / ATS #1 OUTPUT PORTS

Port	Receptacle	Adapter	Plug	Component
1	C13	None	C14	24 VDC #1
2	C13	None	C14	24 VDC #2
3	C13	None	C14	24 VDC #3
4	C13	None	C14	ZC 1
5	C13	None	C14	ZC 2
6	C13	None	C14	DVR
7	C13	Tripp Lite P002-001-10A, C14 to NEMA 5-15R	5-15P	Switch 1
8	C13	Tripp Lite P002-001-10A, C14 to NEMA 5-15R	5-15P	Switch 2
9	C13	Tripp Lite P002-001-10A, C14 to NEMA 5-15R	5-15P	POE Injector
10	C13	None	C14	Fiber modem
11	C13			
12	C13			
13	C13			
14	C13			
15	C13			
16	C13			

ROADSIDE CABINET PDU / ATS #2 OUTPUT PORTS

Port	Receptacle	Adapter	Plug	Component
1	C13	None	C14	24 VDC #4
2	C13	None	C14	24 VDC #5
3	C13	None	C14	24 VDC #6
4	C13	None	C14	ZC 1
5	C13	None	C14	ZC 2
6	C13	None	C14	DVR
7	C13	Tripp Lite P002-001-10A, C14 to NEMA 5-15R	5-15P	Switch 1
8	C13	Tripp Lite P002-001-10A, C14 to NEMA 5-15R	5-15P	Switch 2
9	C13	Tripp Lite P002-001-10A, C14 to NEMA 5-15R	5-15P	Loop rack
10	C13	None	C14	Fiber modem
11	C13			
12	C13			
13	C13			
14	C13			
15	C13			
16	C13			

ROADSIDE CABINET PDU / ATS #1 INPUT PORTS

Port	From	Plug	Receptacle
1	UPS	L6-30P	L6-30R
2	Roadside Cabinet Distr. Panel	L6-30P	L6-30R

ROADSIDE CABINET PDU / ATS #2 INPUT PORTS

Port	From	Plug	Receptacle
1	UPS	L6-30P	L6-30R
2	Roadside Cabinet Distr. Panel	L6-30P	L6-30R

STATE OF TEXAS - DEPARTMENT OF TRANSPORTATION

CONSULTANT FUNCTIONAL SUPERVISOR ---

CALCULATED-DESIGNED BY T. Hammond

CHECKED BY --

REVISED BY T. Hammond

DATE REVISED 4/10/2017 2:44 PM

DATE/TIME PLOTTED 6/8/2018 11:24 AM

FILENAME NETRMA SEGMENT 4 TOLLING DESIGN.DWG

LAST REVISION 00-00-00

Dist	COUNTY	ROUTE	POST MILES TOTAL PROJECT	SHEET No.	TOTAL SHEETS
---	Smith	Toll 49	0.0 / 0.0	44	65

REGISTERED ENGINEER DATE

PLANS APPROVAL DATE

THE STATE OF TEXAS OR ITS OFFICERS OR AGENTS SHALL NOT BE RESPONSIBLE FOR THE ACCURACY OR COMPLETENESS OF SCANNED COPIES OF THIS PLAN SHEET.

Kapsch TrafficCom
211 East 7th Street, Suite 800
Austin, Texas 78701

North East Texas Regional Mobility Auth.
909 ESE Loop 323, Suite 360
Tyler, Texas 75701

5/24 VDC Low Voltage Wiring Bus #1

COMPONENT	CONNECTION	TERM. BLK. #		TERM. BLK. #	CONNECTION	CHANNEL NUMBER	SNAP POSITION	MODULE TYPE	COMPONENT
	Earth Ground		SURGE		TB01				+24 VDC Power supplies 1-2
					TB25				-24 VDC Power supplies 1-2
		TB01	15A	TB01	TB02 & Surge (+)				
		Spacer							
		TB02	Jumper	TB02	TB01				
		TB03		TB03	C (Pin 2)	0	5	OMR6	SNAP #1 (Front VES Cam. Lane 1)
		TB04		TB04	C (Pin 5)	1	5	OMR6	SNAP #1 (Front VES Cam. Lane 2)
		TB05		TB05	C (Pin 8)	2	5	OMR6	SNAP #1 (Front VES Cam. Lane 3)
		TB06		TB06	C (Pin 11)	3	5	OMR6	SNAP #1 (Front SICK Lane 1)
		TB07		TB07	C (Pin 2)	0	6	OMR6	SNAP #1 (Front SICK Lane 2)
		TB08		TB08	C (Pin 5)	1	6	OMR6	SNAP #1 (Front SICK Lane 3)
		TB09		TB09	C (Pin 8)	2	6	OMR6	SNAP #1 (Treadle #1)
		TB10		TB10	C (Pin 11)	3	6	OMR6	SNAP #1 (Treadle #2)
		TB11		TB11	C (Pin 2)	0	7	OMR6	SNAP #1 (Treadle #3)
		TB12		TB12	C (Pin 5)	1	7	OMR6	SNAP #1 (AVI Reader #1)
		TB13		TB13	TB24				5 VDC Transformer
		Spacer							
Front VES Cam. Lane 1	X4, Pin 10	TB14	10A	TB14	NC (Pin 3)	0	5	OMR6	SNAP #1 (Front VES Cam. Lane 1)
Front VES Cam. Lane 2	X4, Pin 10	TB15	10A	TB15	NC (Pin 6)	1	5	OMR6	SNAP #1 (Front VES Cam. Lane 2)
Front VES Cam. Lane 3	X4, Pin 10	TB16	10A	TB16	NC (Pin 9)	2	5	OMR6	SNAP #1 (Front VES Cam. Lane 3)
Front SICK Lane 1	Pins 1, 2	TB17	10A	TB17	NC (Pin 12)	3	5	OMR6	SNAP #1 (Front SICK Lane 1)
Front SICK Lane 2	Pins 1, 2	TB18	10A	TB18	NC (Pin 3)	0	6	OMR6	SNAP #1 (Front SICK Lane 2)
Front SICK Lane 3	Pins 1, 2	TB19	10A	TB19	NC (Pin 6)	1	6	OMR6	SNAP #1 (Front SICK Lane 3)
Treadle #1	Pin 0	TB20	10A	TB20	NC (Pin 9)	2	6	OMR6	SNAP #1 (Treadle #1)
Treadle #2	Pin 0	TB21	10A	TB21	NC (Pin 12)	3	6	OMR6	SNAP #1 (Treadle #2)
Treadle #3	Pin 0	TB22	10A	TB22	NC (Pin 3)	0	7	OMR6	SNAP #1 (Treadle #3)
AVI Reader #1	Pin T	TB23	10A	TB23	NC (Pin 6)	1	7	OMR6	SNAP #1 (AVI Reader #1)
5 VDC Transformer	IN (+)	TB24	10A	TB24	TB13				5 VDC Transformer
		Spacer							
		TB25	Jumper	TB25	Surge (-)				
Front VES Cam. Lane 1	X4, Pin 9	TB26		TB26					
Front VES Cam. Lane 2	X4, Pin 9	TB27		TB27					
Front VES Cam. Lane 3	X4, Pin 9	TB28		TB28					
Front SICK Lane 1	Pins 3, 5	TB29		TB29					
Front SICK Lane 2	Pins 3, 5	TB30		TB30					
Front SICK Lane 3	Pins 3, 5	TB31		TB31					
Treadle #1	Pin 1	TB32		TB32					
Treadle #2	Pin 1	TB33		TB33					
Treadle #3	Pin 1	TB34		TB34					
AVI Reader #1	Pin U	TB35		TB35					
5 VDC Transformer	IN (-)	TB36		TB36					
		Spacer							
		TB37	Jumper	TB37	5 (+)				SNAP Rack #1 and #2 (+5)
Treadle card #1	Pin 7, Pin 9	TB38		TB38					
Treadle card #2	Pin 7, Pin 9	TB39		TB39					
Treadle card #3	Pin 7, Pin 9	TB40		TB40					
Treadle card #4	Pin 7, Pin 9	TB41		TB41					
Treadle card #5	Pin 7, Pin 9	TB42		TB42					
Treadle card #6	Pin 7, Pin 9	TB43		TB43					
		TB44		TB44	Pins 2, 4, 6, 8	0-3	0	IDC5	SNAP #1 (IDC5 #1)
		TB45		TB45					
		TB46		TB46	OUT (+)				5 VDC Transformer
		Spacer							
24 VDC (+)	TB24	+	5 VDC	+	TB46				
24 VDC (-)	TB36	-		-	TB47				
		Spacer							
		TB47	Jumper	TB47	OUT (-)				5 VDC Transformer
		TB48		TB48	Pins 2, 4, 6, 8	0-3	0	IDC5	SNAP #1 (IDC5 #2)
		TB49		TB49	Pins 2, 4, 6, 8	0-3	0	IDC5	SNAP #2 (IDC5 #1)
		TB50		TB50	Pins 2, 4, 6, 8	0-3	1	IDC5	SNAP #2 (IDC5 #2)
Loop card #1	Pin 1	TB51		TB51					
Loop card #2	Pin 1	TB52		TB52					
		TB53		TB53					
		TB54		TB54	5 (-)				SNAP Rack #1 and #2 (-5)
		Spacer							

5/24 VDC Low Voltage Wiring Bus #2

COMPONENT	CONNECTION	TERM. BLK. #		TERM. BLK. #	CONNECTION	CHANNEL NUMBER	SNAP POSITION	MODULE TYPE	COMPONENT
	Earth Ground		SURGE		TB55				+24 VDC Power supplies 1-2
					TB79				-24 VDC Power supplies 1-2
		TB55	15A	TB55	TB56 & Surge (+)				
		Spacer							
		TB56	Jumper	TB56	TB55				
		TB57		TB57	C (Pin 2)	0	5	OMR6	SNAP #2 (Rear VES Cam. Lane 1)
		TB58		TB58	C (Pin 5)	1	5	OMR6	SNAP #2 (Rear VES Cam. Lane 2)
		TB59		TB59	C (Pin 8)	2	5	OMR6	SNAP #2 (Rear VES Cam. Lane 3)
		TB60		TB60	C (Pin 11)	3	5	OMR6	SNAP #2 (Rear SICK Lane 1)
		TB61		TB61	C (Pin 2)	0	6	OMR6	SNAP #2 (Rear SICK Lane 2)
		TB62		TB62	C (Pin 5)	1	6	OMR6	SNAP #2 (Rear SICK Lane 3)
		TB63		TB63	C (Pin 8)	2	6	OMR6	SNAP #2 (Treadle #4)
		TB64		TB64	C (Pin 11)	3	6	OMR6	SNAP #2 (Treadle #5)
		TB65		TB65	C (Pin 2)	0	7	OMR6	SNAP #2 (Treadle #6)
		TB66		TB66	C (Pin 5)	1	7	OMR6	SNAP #2 (AVI Reader #2)
		TB67		TB67					
		Spacer							
Rear VES Cam. Lane 1	X4, Pin 10	TB68	10A	TB68	NC (Pin 3)	0	5	OMR6	SNAP #2 (Rear VES Cam. Lane 1)
Rear VES Cam. Lane 2	X4, Pin 10	TB69	10A	TB69	NC (Pin 6)	1	5	OMR6	SNAP #2 (Rear VES Cam. Lane 2)
Rear VES Cam. Lane 3	X4, Pin 10	TB70	10A	TB70	NC (Pin 9)	2	5	OMR6	SNAP #2 (Rear VES Cam. Lane 3)
Rear SICK Lane 1	Pins 1, 2	TB71	10A	TB71	NC (Pin 12)	3	5	OMR6	SNAP #2 (Rear SICK Lane 1)
Rear SICK Lane 2	Pins 1, 2	TB72	10A	TB72	NC (Pin 3)	0	6	OMR6	SNAP #2 (Rear SICK Lane 2)
Rear SICK Lane 3	Pins 1, 2	TB73	10A	TB73	NC (Pin 6)	1	6	OMR6	SNAP #2 (Rear SICK Lane 3)
Treadle #4	Pin 0	TB74	10A	TB74	NC (Pin 9)	2	6	OMR6	SNAP #2 (Treadle #4)
Treadle #5	Pin 0	TB75	10A	TB75	NC (Pin 12)	3	6	OMR6	SNAP #2 (Treadle #5)
Treadle #6	Pin 0	TB76	10A	TB76	NC (Pin 3)	0	7	OMR6	SNAP #2 (Treadle #6)
AVI Reader #2	Pin T	TB77	10A	TB77	NC (Pin 6)	1	7	OMR6	SNAP #2 (AVI Reader #2)
		TB78	10A	TB78					
		Spacer							
		TB79	Jumper	TB79	Surge (-)				
Rear VES Cam. Lane 1	X4, Pin 9	TB80		TB80					
Rear VES Cam. Lane 2	X4, Pin 9	TB81		TB81					
Rear VES Cam. Lane 3	X4, Pin 9	TB82		TB82					
Rear SICK Lane 1	Pins 3, 5	TB83		TB83					
Rear SICK Lane 2	Pins 3, 5	TB84		TB84					
Rear SICK Lane 3	Pins 3, 5	TB85		TB85					
Treadle #4	Pin 1	TB86		TB86					
Treadle #5	Pin 1	TB87		TB87					
Treadle #6	Pin 1	TB88		TB88					
AVI Reader #2	Pin U	TB89		TB89					
		TB90		TB90					
		Spacer							

Loop Input Wiring

COMPONENT	CONNECTION	TERM. BLK #		TERM. BLK #	CONNECTION	CHANNEL NUMBER	SNAP POSITION	MODULE TYPE	COMPONENT
Lane 1 Loop 1 Output 1	Card 1, Pin 3	TB91		TB91	Pin 1	0	0	IDC5	SNAP #1 (Lane 1 Loop 1)
Lane 1 Loop 2 Output 2	Card 1, Pin 4	TB92		TB92	Pin 3	1	0	IDC5	SNAP #1 (Lane 1 Loop 2)
Lane 5 Loop 1 Output 1	Card 2, Pin 3	TB93		TB93	Pin 5	2	0	IDC5	SNAP #1 (Lane 5 Loop 1)
Lane 5 Loop 2 Output 2	Card 2, Pin 4	TB94		TB94	Pin 7	3	0	IDC5	SNAP #1 (Lane 5 Loop 2)

Treadle Input Wiring

COMPONENT	CONNECTION	TERM. BLK #		TERM. BLK #	CONNECTION	CHANNEL NUMBER	SNAP POSITION	MODULE TYPE	COMPONENT
Lane 2, Treadle 1, Output 1	Card 1, Pin 6	TB95		TB95	Pin 1	0	1	IDC5	SNAP #1 (Lane 2, Treadle 1)
Lane 2, Treadle 2, Output 2	Card 1, Pin 8	TB96		TB96	Pin 3	1	1	IDC5	SNAP #1 (Lane 2, Treadle 2)
Lane 4, Treadle 3, Output 1	Card 2, Pin 6	TB97		TB97	Pin 5	2	1	IDC5	SNAP #1 (Lane 4, Treadle 3)
Lane 4, Treadle 4, Output 2	Card 2, Pin 8	TB98		TB98	Pin 7	3	1	IDC5	SNAP #1 (Lane 4, Treadle 4)
Lane 3, Treadle 1, Output 1	Card 3, Pin 6	TB99		TB99	Pin 1	0	0	IDC5	SNAP #2 (Lane 3, Treadle 1)
Lane 3, Treadle 2, Output 2	Card 3, Pin 8	TB100		TB100	Pin 3	1	0	IDC5	SNAP #2 (Lane 3, Treadle 2)
Lane 2, Treadle 3, Output 1	Card 4, Pin 6	TB101		TB101	Pin 5	2	0	IDC5	SNAP #2 (Lane 2, Treadle 3)
Lane 2, Treadle 4, Output 2	Card 4, Pin 8	TB102		TB102	Pin 7	3	0	IDC5	SNAP #2 (Lane 2, Treadle 4)
Lane 4, Treadle 1, Output 1	Card 5, Pin 6	TB103		TB103	Pin 1	0	1	IDC5	SNAP #2 (Lane 4, Treadle 1)
Lane 4, Treadle 2, Output 2	Card 5, Pin 8	TB104		TB104	Pin 3	1	1	IDC5	SNAP #2 (Lane 4, Treadle 2)
Lane 3, Treadle 3, Output 1	Card 6, Pin 6	TB105		TB105	Pin 5	2	1	IDC5	SNAP #2 (Lane 3, Treadle 3)
Lane 3, Treadle 4, Output 2	Card 6, Pin 8	TB106		TB106	Pin 7	3	1	IDC5	SNAP #2 (Lane 3, Treadle 4)

STATE OF TEXAS – DEPARTMENT OF TRANSPORTATION

CONSULTANT FUNCTIONAL SUPERVISOR ---

CALCULATED–DESIGNED BY T. Hammond CHECKED BY --

REVISED BY T. Hammond DATE REVISED 4/10/2017 2:44 PM

DATE/TIME PLOTTED 6/8/2018 11:24 AM

FILENAME NETRMA SEGMENT 4 TOLLING DESIGN.DWG

LAST REVISION 00-00-00

BORDER LAST REVISED 06/08/2018 | RELATIVE BORDER SCALE IS IN INCHES 0 1 2 3 | UNIT --- | PROJECT NUMBER & PHASE --- | SHEET TITLE Low Voltage Connection Details - Mainlane | SHEET NUMBER PC-026 | SCALE NTS

Dist	COUNTY	ROUTE	POST MILES TOTAL PROJECT	SHEET No.	TOTAL SHEETS
---	Smith	Toll 49	0.0 / 0.0	45	65

REGISTERED ENGINEER DATE

PLANS APPROVAL DATE

THE STATE OF TEXAS OR ITS OFFICERS OR AGENTS SHALL NOT BE RESPONSIBLE FOR THE ACCURACY OR COMPLETENESS OF SCANNED COPIES OF THIS PLAN SHEET.

Kapsch TrafficCom
211 East 7th Street, Suite 800
Austin, Texas 78701

North East Texas Regional Mobility Auth.
909 ESE Loop 323, Suite 360
Tyler, Texas 75701

ROADSIDE CABINET PDU / ATS #1 OUTPUT PORTS

Port	Receptacle	Adapter	Plug	Component
1	C13	None	C14	24 VDC #1
2	C13	None	C14	24 VDC #2
3	C13	None	C14	24 VDC #3
4	C13	None	C14	ZC 1
5	C13	None	C14	ZC 2
6	C13	None	C14	DVR
7	C13	Tripp Lite P002-001-10A, C14 to NEMA 5-15R	5-15P	Switch 1
8	C13	Tripp Lite P002-001-10A, C14 to NEMA 5-15R	5-15P	Switch 2
9	C13	Tripp Lite P002-001-10A, C14 to NEMA 5-15R	5-15P	POE Injector
10	C13			
11	C13			
12	C13			
13	C13			
14	C13			
15	C13			
16	C13			

ROADSIDE CABINET PDU / ATS #2 OUTPUT PORTS

Port	Receptacle	Adapter	Plug	Component
1	C13	None	C14	24 VDC #4
2	C13	None	C14	24 VDC #5
3	C13	None	C14	24 VDC #6
4	C13	None	C14	ZC 1
5	C13	None	C14	ZC 2
6	C13	None	C14	DVR
7	C13	Tripp Lite P002-001-10A, C14 to NEMA 5-15R	5-15P	Switch 1
8	C13	Tripp Lite P002-001-10A, C14 to NEMA 5-15R	5-15P	Switch 2
9	C13			
10	C13			
11	C13			
12	C13			
13	C13			
14	C13			
15	C13			
16	C13			

ROADSIDE CABINET PDU / ATS #1 INPUT PORTS

Port	From	Plug	Receptacle
1	UPS	L6-30P	L6-30R
2	Roadside Cabinet Distr. Panel	L6-30P	L6-30R

ROADSIDE CABINET PDU / ATS #2 INPUT PORTS

Port	From	Plug	Receptacle
1	UPS	L6-30P	L6-30R
2	Roadside Cabinet Distr. Panel	L6-30P	L6-30R

STATE OF TEXAS – DEPARTMENT OF TRANSPORTATION

CONSULTANT FUNCTIONAL SUPERVISOR ---

CALCULATED–DESIGNED BY T. Hammond

CHECKED BY --

REVISED BY T. Hammond

DATE REVISED 4/10/2017 2:44 PM

DATE/TIME PLOTTED 6/8/2018 11:24 AM

FILENAME NETRMA SEGMENT 4 TOLLING DESIGN.DWG

LAST REVISION 00-00-00

BORDER LAST REVISED 06/08/2018 | RELATIVE BORDER SCALE IS IN INCHES 0 1 2 3 | UNIT --- | PROJECT NUMBER & PHASE --- | SHEET TITLE High Voltage Connection Details - Ramp | SHEET NUMBER PC-027 | SCALE NTS

Dist	COUNTY	ROUTE	POST MILES TOTAL PROJECT	SHEET No.	TOTAL SHEETS
---	Smith	Toll 49	0.0 / 0.0	46	65

REGISTERED ENGINEER DATE

PLANS APPROVAL DATE

THE STATE OF TEXAS OR ITS OFFICERS OR AGENTS SHALL NOT BE RESPONSIBLE FOR THE ACCURACY OR COMPLETENESS OF SCANNED COPIES OF THIS PLAN SHEET.

Kapsch TrafficCom
211 East 7th Street, Suite 800
Austin, Texas 78701

North East Texas Regional Mobility Auth.
909 ESE Loop 323, Suite 360
Tyler, Texas 75701

5/24 VDC Low Voltage Wiring Bus #1

COMPONENT	CONNECTION	TERM. BLK. #		TERM. BLK. #	CONNECTION	CHANNEL NUMBER	SNAP POSITION	MODULE TYPE	COMPONENT
	Earth Ground		SURGE		TB01				+24 VDC Power supplies 1-2
					TB13				-24 VDC Power supplies 1-2
		TB01	15A	TB01	TB02 & Surge (+)				
		Spacer							
		TB02	Jumper	TB02	TB01				
		TB03		TB03	C (Pin 2)	0	7	OMR6	SNAP #1 (Front VES Cam. Lane 2)
		TB04		TB04	C (Pin 5)	1	7	OMR6	SNAP #1 (Front SICK Lane 2)
		TB05		TB05	C (Pin 8)	2	7	OMR6	SNAP #1 (Treadle #1)
		TB06		TB06	C (Pin 11)	3	7	OMR6	SNAP #1 (AVI Reader)
		TB07		TB07	TB12				5 VDC Transformer
		Spacer							
Front VES Cam. Lane 2	X4, Pin 10	TB08	10A	TB08	NC (Pin 3)	0	7	OMR6	SNAP #1 (Front VES Cam. Lane 2)
Front SICK Lane 2	Pins 1, 2	TB09	10A	TB09	NC (Pin 6)	1	7	OMR6	SNAP #1 (Front SICK Lane 2)
Treadle #1	Pin 0	TB10	10A	TB10	NC (Pin 9)	2	7	OMR6	SNAP #1 (Treadle #1)
AVI Reader	Pin T	TB11	10A	TB11	NC (Pin 12)	3	7	OMR6	SNAP #1 (AVI Reader)
5 VDC Transformer	IN (+)	TB12	10A	TB12	TB07				5 VDC Transformer
		Spacer							
		TB13	Jumper	TB13	Surge (-)				
Front VES Cam. Lane 2	X4, Pin 9	TB14		TB14					
Front SICK Lane 2	Pins 3, 5	TB15		TB15					
Treadle #1	Pin 1	TB16		TB16					
AVI Reader	Pin U	TB17		TB17					
5 VDC Transformer	IN (-)	TB18		TB18					
		Spacer							
		TB19	Jumper	TB19	5 (+)				SNAP Rack #1 and #2 (+5)
Treadle card #1	Pin 7, Pin 9	TB20		TB20					
Treadle card #2	Pin 7, Pin 9	TB21		TB21					
		TB22		TB22	OUT (+)				5 VDC Transformer
		Spacer							
24 VDC (+)	TB12	+	5 VDC	+	TB22				
24 VDC (-)	TB18	-		-	TB23				
		Spacer							
		TB23	Jumper	TB23	OUT (-)				5 VDC Transformer
		TB24		TB24	Pins 2, 4, 6, 8	0-3	0	IDC5	SNAP #1 (IDC5 #1)
		TB25		TB25	Pins 2, 4, 6, 8	0-3	0	IDC5	SNAP #2 (IDC5 #1)
		TB26		TB26	5 (-)				SNAP Rack #1 and #2 (-5)
		Spacer							

5/24 VDC Low Voltage Wiring Bus #2

COMPONENT	CONNECTION	TERM. BLK. #		TERM. BLK. #	CONNECTION	CHANNEL NUMBER	SNAP POSITION	MODULE TYPE	COMPONENT
	Earth Ground		SURGE		TB27				+24 VDC Power supplies 1-2
					TB36				-24 VDC Power supplies 1-2
		TB27	15A	TB27	TB28 & Surge (+)				
		Spacer							
		TB28	Jumper	TB28	TB27				
		TB29		TB29	C (Pin 2)	0	7	OMR6	SNAP #2 (Rear VES Cam. Lane 2)
		TB30		TB30	C (Pin 5)	1	7	OMR6	SNAP #2 (Rear SICK Lane 2)
		TB31		TB31	C (Pin 8)	2	7	OMR6	SNAP #2 (Treadle #2)
		TB32		TB32					
		Spacer							
Rear VES Cam. Lane 2	X4, Pin 10	TB33	10A	TB33	NC (Pin 3)	0	7	OMR6	SNAP #2 (Rear VES Cam. Lane 2)
Rear SICK Lane 2	Pins 1, 2	TB34	10A	TB34	NC (Pin 6)	1	7	OMR6	SNAP #2 (Rear SICK Lane 2)
Treadle #2	Pin 0	TB35	10A	TB35	NC (Pin 9)	2	7	OMR6	SNAP #2 (Treadle #2)
		Spacer							
		TB36	Jumper	TB36	Surge (-)				
Rear VES Cam. Lane 2	X4, Pin 9	TB37		TB37					
Rear SICK Lane 2	Pins 3, 5	TB38		TB38					
Treadle #2	Pin 1	TB39		TB39					
		Spacer							

Treadle Input Wiring

COMPONENT	CONNECTION	TERM. BLK #		TERM. BLK #	CONNECTION	CHANNEL NUMBER	SNAP POSITION	MODULE TYPE	COMPONENT
Lane 2, Treadle 1, Output 1	Card 1, Pin 6	TB40		TB40	Pin 1	0	0	IDC5	SNAP #1 (Lane 2, Treadle 1)
Lane 2, Treadle 1, Output 2	Card 1, Pin 8	TB41		TB41	Pin 3	1	0	IDC5	SNAP #1 (Lane 2, Treadle 2)
Lane 2, Treadle 2, Output 1	Card 2, Pin 6	TB42		TB42	Pin 1	0	0	IDC5	SNAP #2 (Lane 2, Treadle 3)
Lane 2, Treadle 2, Output 2	Card 2, Pin 8	TB43		TB43	Pin 3	1	0	IDC5	SNAP #2 (Lane 2, Treadle 4)

STATE OF TEXAS – DEPARTMENT OF TRANSPORTATION

CONSULTANT FUNCTIONAL SUPERVISOR ---

CALCULATED–DESIGNED BY T. Hammond CHECKED BY --

REVISED BY T. Hammond DATE REVISED 4/10/2017 2:44 PM

DATE/TIME PLOTTED 6/8/2018 11:24 AM

FILENAME NETRMA SEGMENT 4 TOLLING DESIGN.DWG

LAST REVISION 00-00-00

BORDER LAST REVISED 06/08/2018 | RELATIVE BORDER SCALE IS IN INCHES 0 1 2 3 | UNIT --- | PROJECT NUMBER & PHASE --- | SHEET TITLE Low Voltage Connection Details - Ramp | SHEET NUMBER PC-028 | SCALE NTS

Dist	COUNTY	ROUTE	POST MILES TOTAL PROJECT	SHEET No.	TOTAL SHEETS
---	Smith	Toll 49	0.0 / 0.0	47	65

REGISTERED ENGINEER DATE

PLANS APPROVAL DATE

THE STATE OF TEXAS OR ITS OFFICERS OR AGENTS SHALL NOT BE RESPONSIBLE FOR THE ACCURACY OR COMPLETENESS OF SCANNED COPIES OF THIS PLAN SHEET.

Kapsch TrafficCom
211 East 7th Street, Suite 800
Austin, Texas 78701

North East Texas Regional Mobility Auth.
909 ESE Loop 323, Suite 360
Tyler, Texas 75701

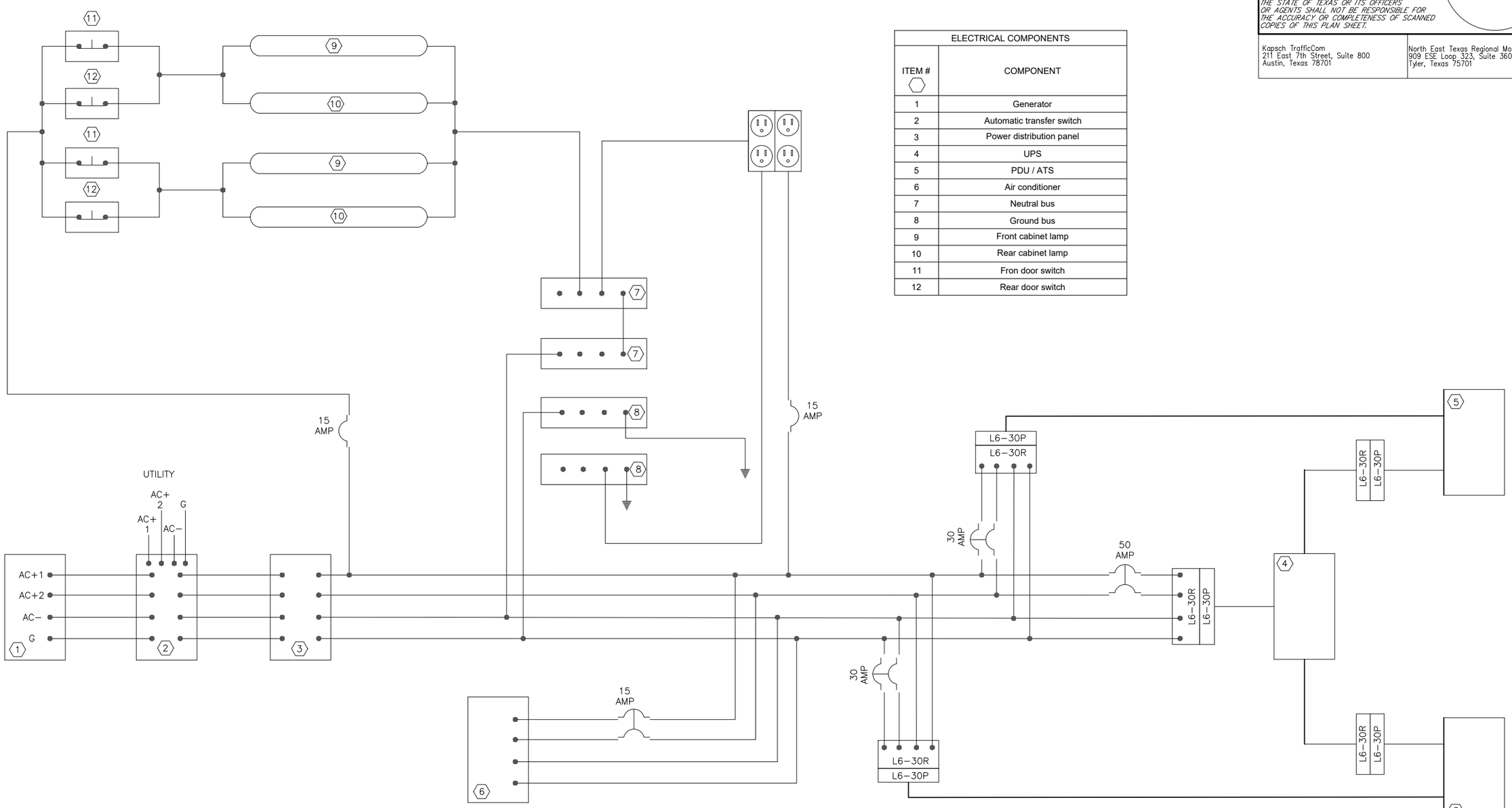

ELECTRICAL COMPONENTS	
ITEM #	COMPONENT
1	Generator
2	Automatic transfer switch
3	Power distribution panel
4	UPS
5	PDU / ATS
6	Air conditioner
7	Neutral bus
8	Ground bus
9	Front cabinet lamp
10	Rear cabinet lamp
11	Fron door switch
12	Rear door switch

STATE OF TEXAS - DEPARTMENT OF TRANSPORTATION

CONSULTANT FUNCTIONAL SUPERVISOR ---

CALCULATED-DESIGNED BY T. Hammond

CHECKED BY --

REVISED BY T. Hammond

DATE REVISED 4/10/2017 2:44 PM

DATE/TIME PLOTTED 6/8/2018 11:24 AM

FILENAME NETRMA SEGMENT 4 TOLLING DESIGN.DWG

LAST REVISION 00-00-00

BORDER LAST REVISED 06/08/2018 | RELATIVE BORDER SCALE IS IN INCHES 0 1 2 3 | UNIT --- | PROJECT NUMBER & PHASE --- | SHEET TITLE Toll Cabinet Wiring Schematic | SHEET NUMBER PC-029 | SCALE NTS

Dist	COUNTY	ROUTE	POST MILES TOTAL PROJECT	SHEET No.	TOTAL SHEETS
---	Smith	Toll 49	0.0 / 0.0	48	65

REGISTERED ENGINEER DATE

PLANS APPROVAL DATE

THE STATE OF TEXAS OR ITS OFFICERS OR AGENTS SHALL NOT BE RESPONSIBLE FOR THE ACCURACY OR COMPLETENESS OF SCANNED COPIES OF THIS PLAN SHEET.

Kapsch TrafficCom
211 East 7th Street, Suite 800
Austin, Texas 78701

North East Texas Regional Mobility Auth.
909 ESE Loop 323, Suite 360
Tyler, Texas 75701

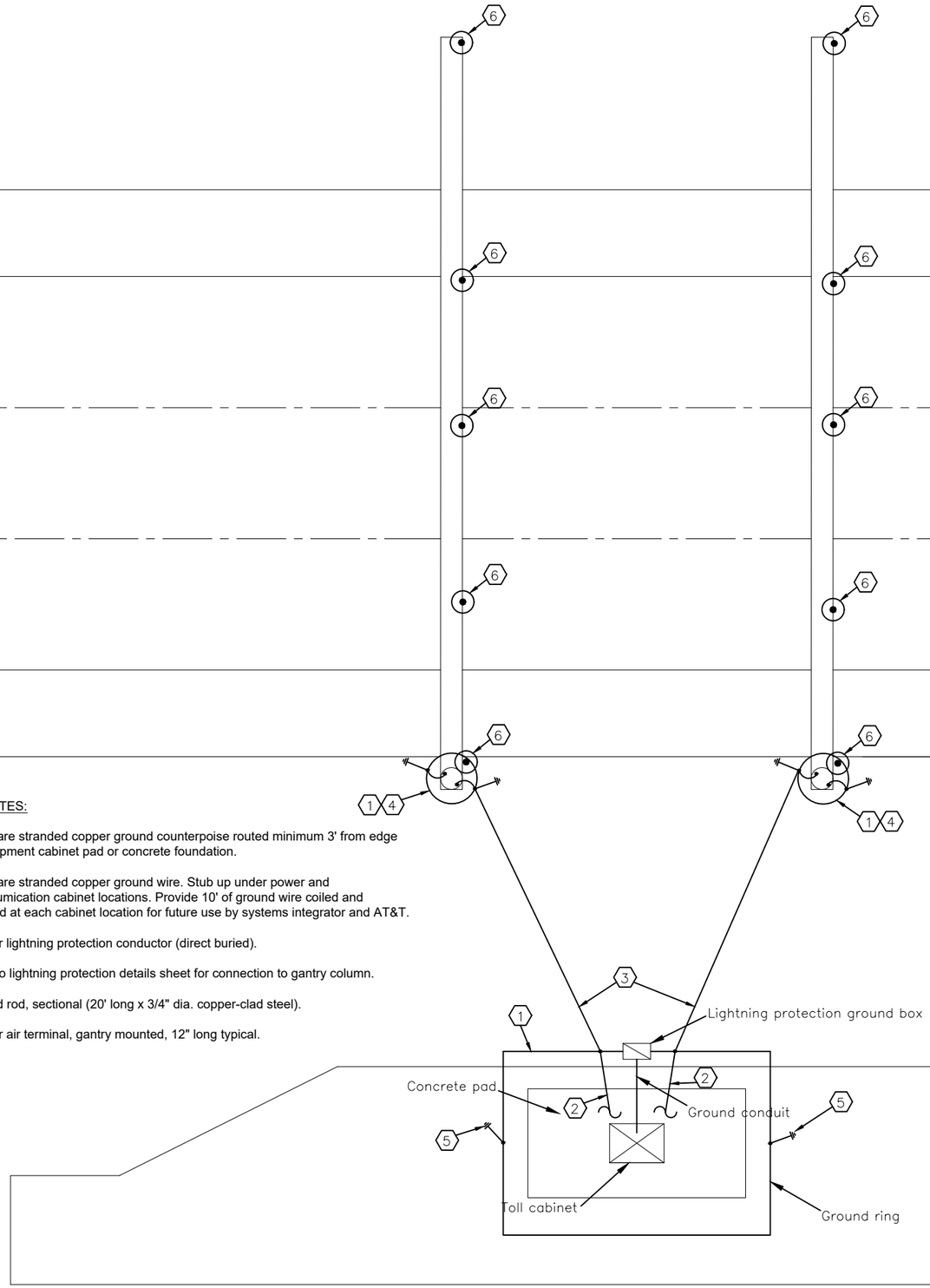

KEYED NOTES:

1. #2/0 bare stranded copper ground counterpoise routed minimum 3' from edge of equipment cabinet pad or concrete foundation.
2. #2/0 bare stranded copper ground wire. Stub up under power and communication cabinet locations. Provide 10' of ground wire coiled and secured at each cabinet location for future use by systems integrator and AT&T.
3. Copper lightning protection conductor (direct buried).
4. Refer to lightning protection details sheet for connection to gantry column.
5. Ground rod, sectional (20' long x 3/4" dia. copper-clad steel).
6. Copper air terminal, gantry mounted, 12" long typical.

NOTES:

1. Burial depth for lightning protection conductors is 36", unless noted otherwise.
2. 'As built" drawings shall be submitted in accordance with certification procedures.
3. Ground electrodes shall be installed as shown but in no instance shall they be less than 12" below grade and 24" from foundation. Driven rods shall penetrate earth at least 20' -0".
4. Install ground wells at all locations where ground rods are indicated <see lightning protection details sheet).
5. Provide class 1 material for structures less than 75 ft in height, per NFPA 780.
6. Provide installation per NEC and NFPA 780. Notes and design indicated here are performance based, see note 8.
7. All electrical work ano material are new ano shall be provided by the contractor, unless otherwise noted.
8. Lightning protection system shall be UL listed or lightning protection institute (LP11 certified. provide copies of the certification in the manuals, lightning protection installer shall be UL certified.
9. Lightning protection bonding conductors to be not less than 26,240 circular mils and no strand shall be less than 17 AWG. See specifications and NFPA for additional sizing criteria.
10. Maintain horizontal of downward coursing of conductors. All bends shall have at least an 8" radius
11. Attach all exposed conductors, down conductors, and bonding cables at 3'-0" on center maximum.

STATE OF TEXAS – DEPARTMENT OF TRANSPORTATION

CONSULTANT FUNCTIONAL SUPERVISOR ---

CALCULATED-DESIGNED BY T. Hammond

CHECKED BY ---

REVISED BY T. Hammond

DATE REVISED 4/10/2017 2:44 PM

DATE/TIME PLOTTED 6/8/2018 11:24 AM

FILENAME NETRMA SEGMENT 4 TOLLING DESIGN.DWG

LAST REVISION 00-00-00

BORDER LAST REVISED 06/08/2018 | RELATIVE BORDER SCALE IS IN INCHES 0 1 2 3 | UNIT --- | PROJECT NUMBER & PHASE --- | SHEET TITLE Lightning Protection Layout (typ) | SHEET NUMBER PC-030 | SCALE NTS

Dist	COUNTY	ROUTE	POST MILES TOTAL PROJECT	SHEET No.	TOTAL SHEETS
---	Smith	Toll 49	0.0 / 0.0	49	65

REGISTERED ENGINEER DATE

PLANS APPROVAL DATE

THE STATE OF TEXAS OR ITS OFFICERS OR AGENTS SHALL NOT BE RESPONSIBLE FOR THE ACCURACY OR COMPLETENESS OF SCANNED COPIES OF THIS PLAN SHEET.

Kapsch TrafficCom
211 East 7th Street, Suite 800
Austin, Texas 78701

North East Texas Regional Mobility Auth.
909 ESE Loop 323, Suite 360
Tyler, Texas 75701

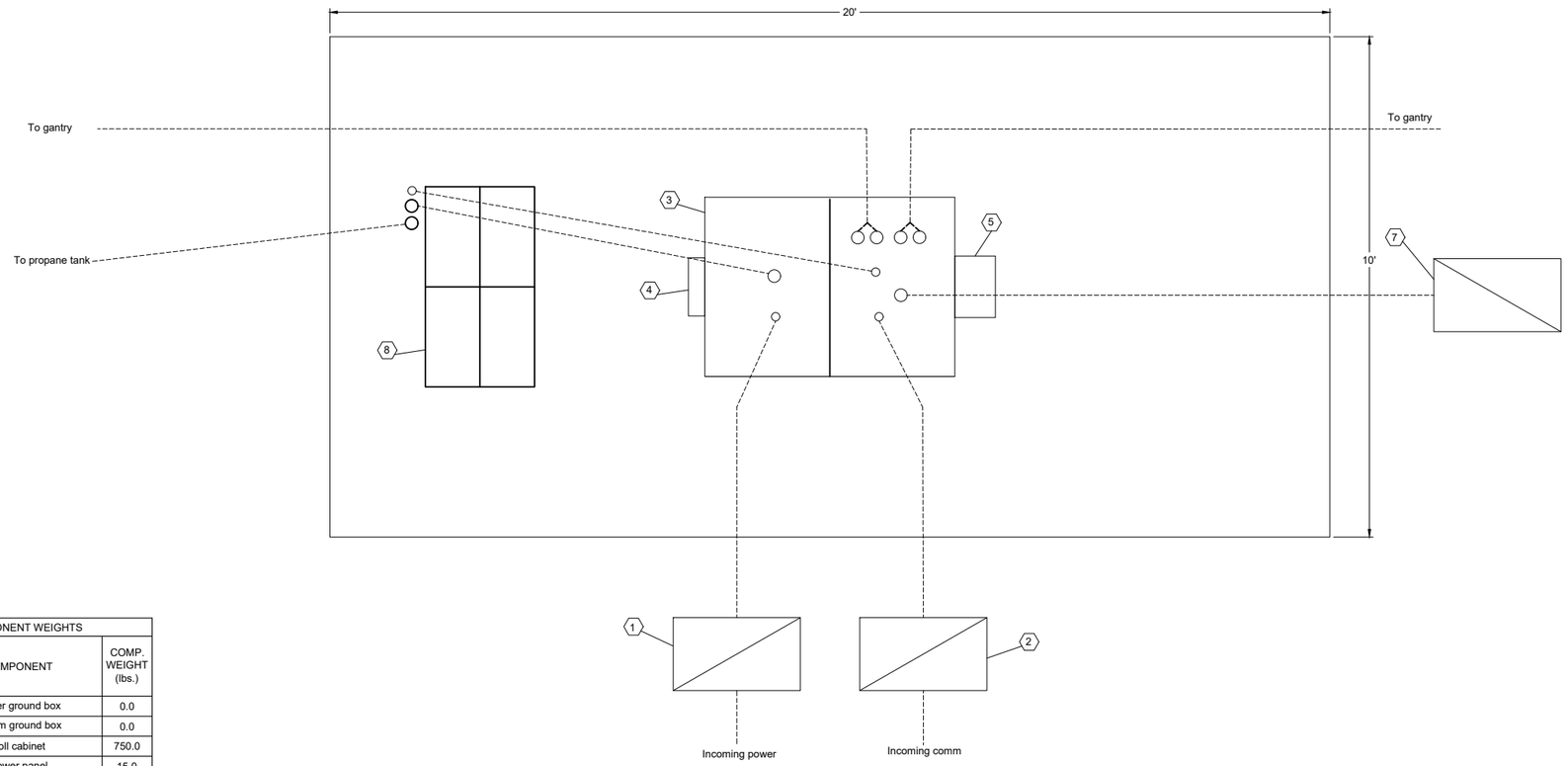

9 Conduit designation

○ 2" conduit Stubup

◯ 3" conduit stubup

— — Conduit

COMPONENT WEIGHTS		
ITEM # ⬡	COMPONENT	COMP. WEIGHT (lbs.)
1	Power ground box	0.0
2	Comm ground box	0.0
3	Toll cabinet	750.0
4	Power panel	15.0
5	HVAC unit	100.0
6	Electronics	1000.0
7	Lightning Protection Ground Box	0.0
8	Generator	420.0
	TOTAL	2285.0

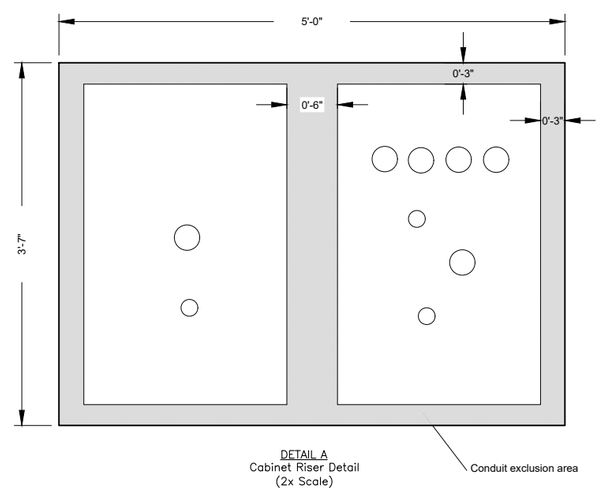

DETAIL A
Cabinet Riser Detail
(2x Scale)

NOTES:

1. Pad configuration is typical to all toll zone locations.
2. Lightning protection supplied by others.
3. Concrete pad shall extend 8–12 inches above finished grade.
4. Conduit stubouts shall extend 10–12 inches above finished pad.
5. Conduit stubouts in the cabinet shall fall within the riser opening and be generally centered as shown in Detail A.
6. Conduit quantities and sizes may change based upon site surveys and gantry layouts.
7. Toll cabinet and generator must have 3 feet of clearance on all sides for service personnel.

REVISED BY	T. Hammond	T. Hammond	---
DATE REVISED	4/10/2017 2:44 PM	---	---
CALCULATED–DESIGNED BY	T. Hammond	CONSULTANT FUNCTIONAL SUPERVISOR	---
CHECKED BY	---		

STATE OF TEXAS – DEPARTMENT OF TRANSPORTATION

DATE/TIME PLOTTED 6/8/2018 11:24 AM

FILENAME NETRMA SEGMENT 4 TOLLING DESIGN.DWG

LAST REVISION 00-00-00

BORDER LAST REVISED 06/08/2018 | RELATIVE BORDER SCALE IS IN INCHES 0 1 2 3 | UNIT --- | PROJECT NUMBER & PHASE --- | SHEET TITLE Toll Pad Layout (with Gen) | SHEET NUMBER PC-031 | SCALE NTS

Dist	COUNTY	ROUTE	POST MILES TOTAL PROJECT	SHEET No.	TOTAL SHEETS
---	Smith	Toll 49	0.0 / 0.0	50	65

REGISTERED ENGINEER DATE

PLANS APPROVAL DATE

THE STATE OF TEXAS OR ITS OFFICERS OR AGENTS SHALL NOT BE RESPONSIBLE FOR THE ACCURACY OR COMPLETENESS OF SCANNED COPIES OF THIS PLAN SHEET.

Kapsch TrafficCom
211 East 7th Street, Suite 800
Austin, Texas 78701

North East Texas Regional Mobility Auth.
909 ESE Loop 323, Suite 360
Tyler, Texas 75701

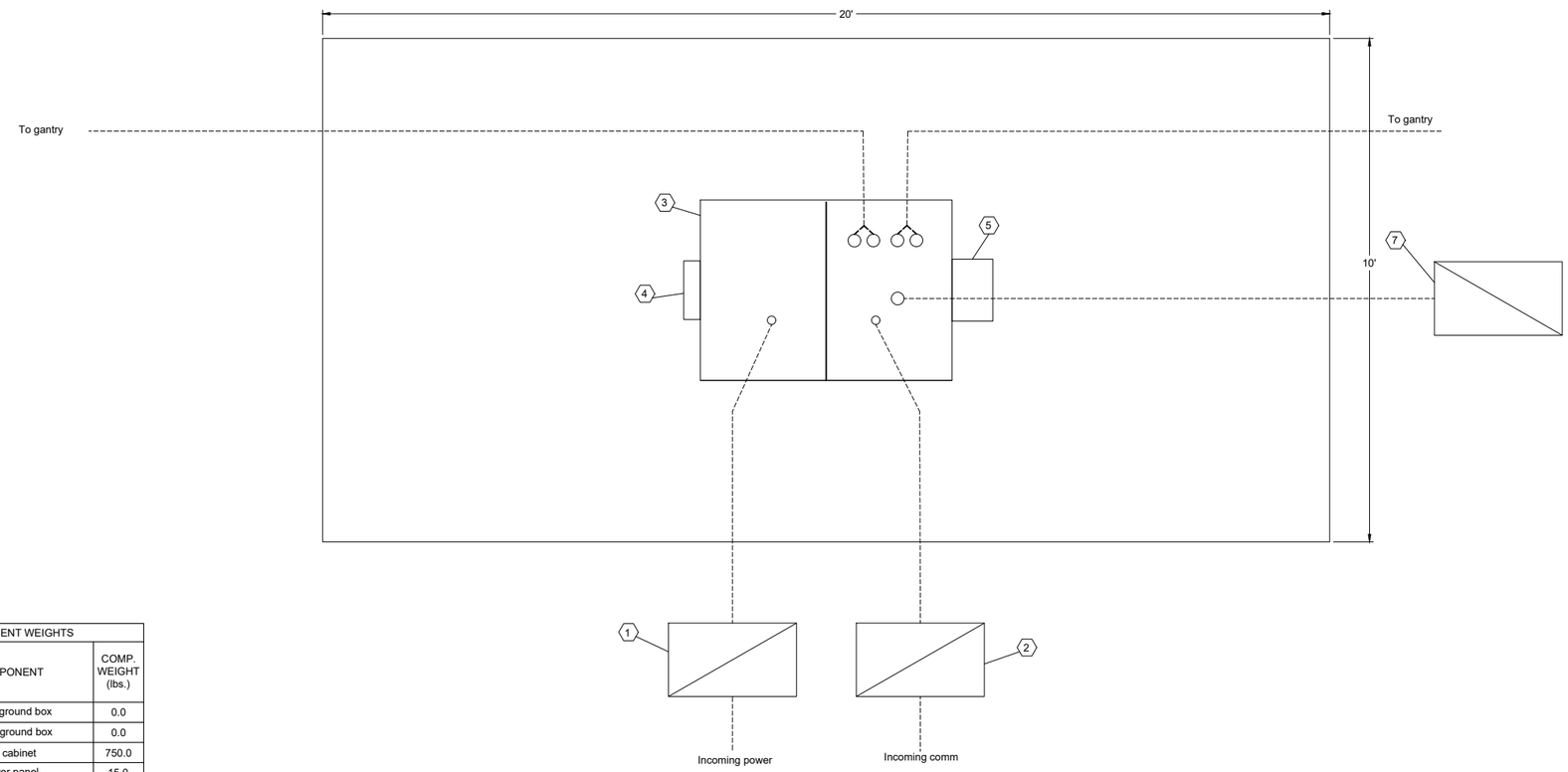

9 Conduit designation

2" conduit Stubup

3" conduit stubup

Conduit

COMPONENT WEIGHTS		
ITEM # ⬡	COMPONENT	COMP. WEIGHT (lbs.)
1	Power ground box	0.0
2	Comm ground box	0.0
3	Toll cabinet	750.0
4	Power panel	15.0
5	HVAC unit	100.0
6	Electronics	1000.0
7	Lightning Protection Ground Box	0.0
	TOTAL	1865.0

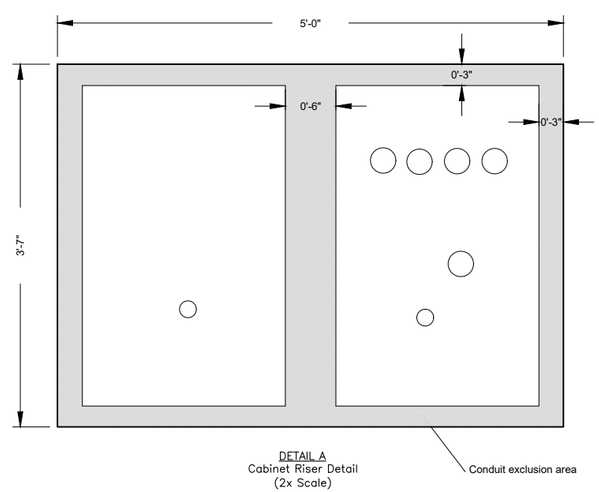

DETAIL A
Cabinet Riser Detail
(2x Scale)

NOTES:

1. Pad configuration is typical to all toll zone locations.
2. Lightning protection supplied by others.
3. Concrete pad shall extend 8–12 inches above finished grade.
4. Conduit stubouts shall extend 10–12 inches above finished pad.
5. Conduit stubouts in the cabinet shall fall within the riser opening and be generally centered as shown in Detail A.
6. Conduit quantities and sizes may change based upon site surveys and gantry layouts.
7. Toll cabinet doors must have 3 feet of clearance for service personnel.

CALCULATED–DESIGNED BY	T. Hammond	REVISED BY	T. Hammond
CHECKED BY	---	DATE REVISED	4/10/2017 2:44 PM
CONSULTANT FUNCTIONAL SUPERVISOR	---		

STATE OF TEXAS – DEPARTMENT OF TRANSPORTATION

DATE/TIME PLOTTED 6/8/2018 11:24 AM

FILENAME NETRMA SEGMENT 4 TOLLING DESIGN.DWG

LAST REVISION 00-00-00

BORDER LAST REVISED 06/08/2018 | RELATIVE BORDER SCALE IS IN INCHES 0 1 2 3 | UNIT --- | PROJECT NUMBER & PHASE --- | SHEET TITLE Toll Pad Layout (without Gen) | SHEET NUMBER PC-032 | SCALE NTS

Dist	COUNTY	ROUTE	POST MILES TOTAL PROJECT	SHEET No.	TOTAL SHEETS
---	Smith	Toll 49	0.0 / 0.0	51	65

REGISTERED ENGINEER DATE

PLANS APPROVAL DATE

THE STATE OF TEXAS OR ITS OFFICERS OR AGENTS SHALL NOT BE RESPONSIBLE FOR THE ACCURACY OR COMPLETENESS OF SCANNED COPIES OF THIS PLAN SHEET.

Kapsch TrafficCom
211 East 7th Street, Suite 800
Austin, Texas 78701

North East Texas Regional Mobility Auth.
909 ESE Loop 323, Suite 360
Tyler, Texas 75701

NOTES:

1. DVRs will be located at mainlane and NB ramp zones.
2. Loop rack is installed only at the Mainlane zone.
3. The external fiber modem will be installed only at the Mainlane zone.
4. Fiber patch panels will be required at the NB and SB ramp zones for lateral connectivity.

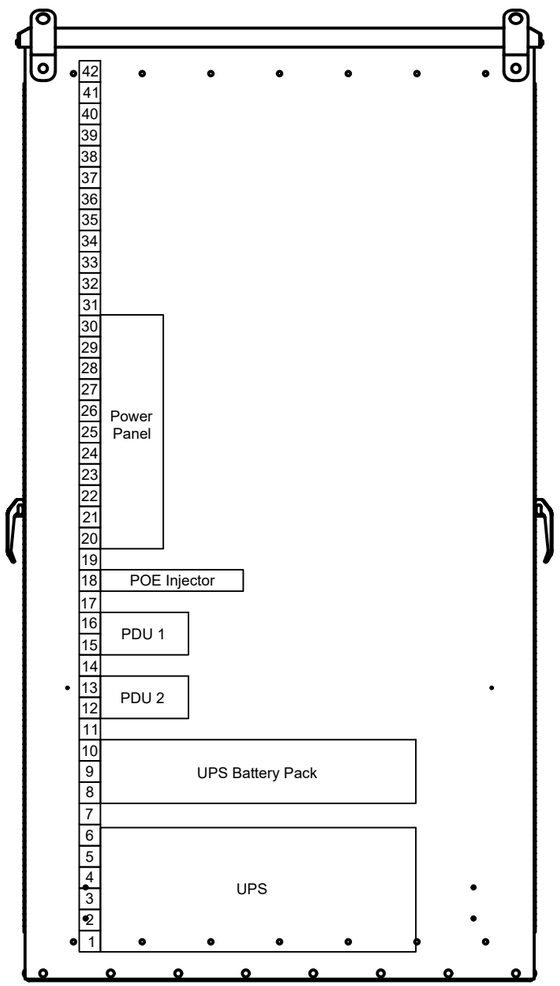

Dual Bay Cabinet
Left Profile View

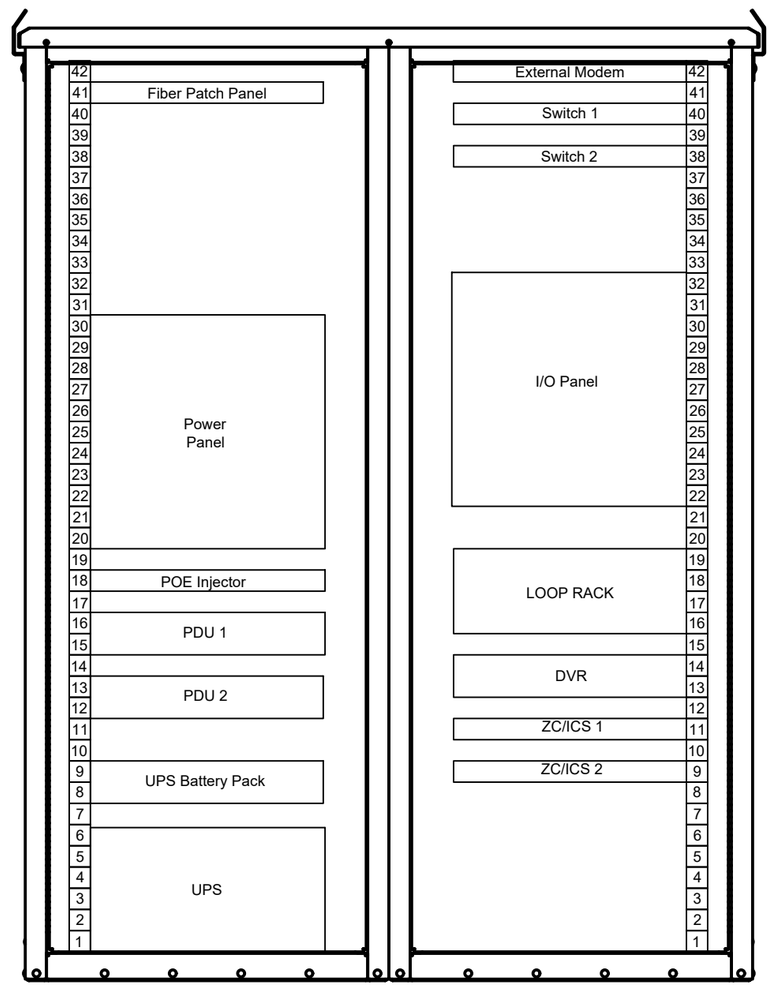

Dual Bay Cabinet
Elevation View

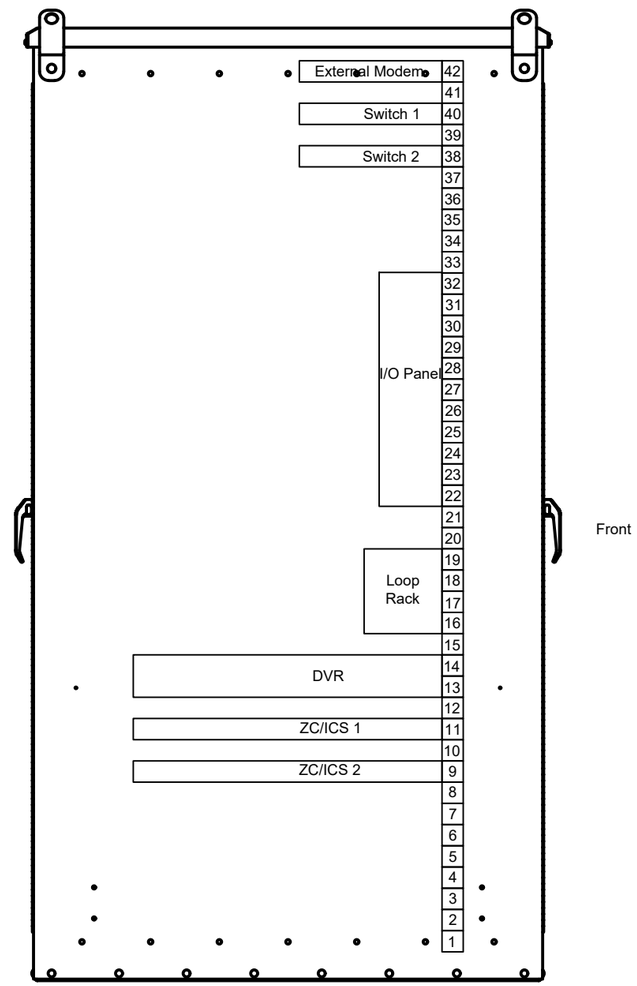

Dual Bay Cabinet
Right Profile View

STATE OF TEXAS - DEPARTMENT OF TRANSPORTATION

CONSULTANT FUNCTIONAL SUPERVISOR ---

CALCULATED-DESIGNED BY T. Hammond

CHECKED BY --

REVISED BY T. Hammond

DATE REVISED 4/10/2017 2:44 PM

DATE/TIME PLOTTED 6/8/2018 11:24 AM

FILENAME NETRMA SEGMENT 4 TOLLING DESIGN.DWG

LAST REVISION 00-00-00

BORDER LAST REVISED 06/08/2018 | RELATIVE BORDER SCALE IS IN INCHES 0 1 2 3 | UNIT --- | PROJECT NUMBER & PHASE --- | SHEET TITLE Toll Cabinet Layout | SHEET NUMBER CM-001 | SCALE NTS

Dist	COUNTY	ROUTE	POST MILES TOTAL PROJECT	SHEET No.	TOTAL SHEETS
---	Smith	Toll 49	0.0 / 0.0	52	65

REGISTERED ENGINEER DATE

PLANS APPROVAL DATE

THE STATE OF TEXAS OR ITS OFFICERS OR AGENTS SHALL NOT BE RESPONSIBLE FOR THE ACCURACY OR COMPLETENESS OF SCANNED COPIES OF THIS PLAN SHEET.

Kapsch TrafficCom
211 East 7th Street, Suite 800
Austin, Texas 78701

North East Texas Regional Mobility Auth.
909 ESE Loop 323, Suite 360
Tyler, Texas 75701

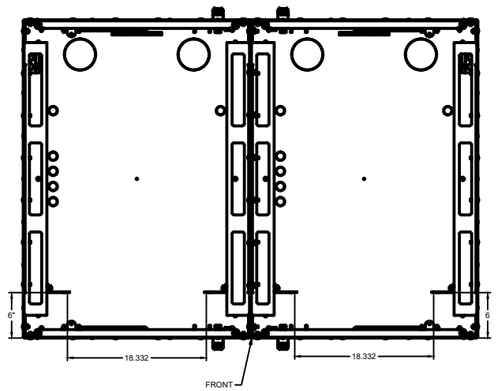

DUAL BAY CABINET
FLOOR PLAN VIEW

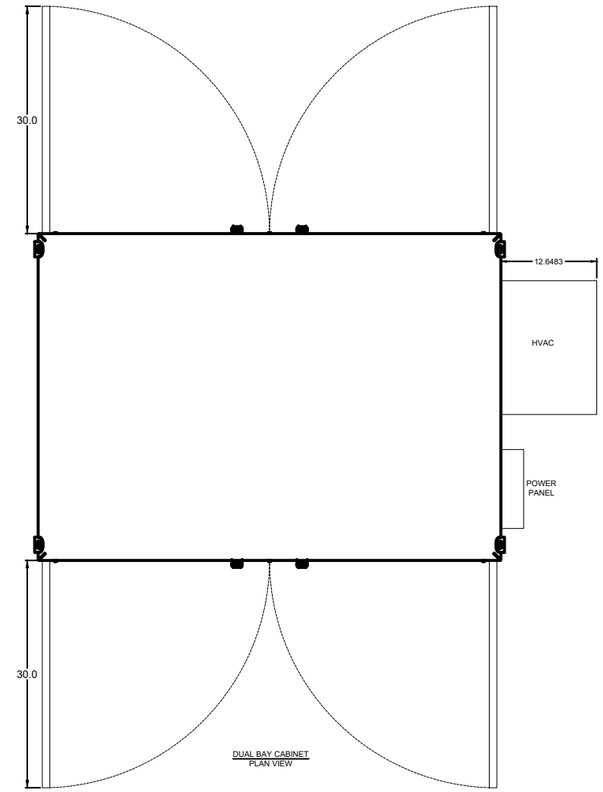

DUAL BAY CABINET
PLAN VIEW

NOTES:

1. DUAL BAY TOLL CABINET REQUIRES THREE FEET OF CLEARANCE ON EACH SIDE.
2. TOLL CABINET DOORS MUST HAVE 3 FEET OF CLEARANCE FOR SERVICE PERSONNEL.
3. SEE TOLL PAD LAYOUT SHEET FOR CABINET AND TOLL COMPONENT WEIGHTS.
4. MODEL NUMBER: **AM78P-6042-84RU-UL**

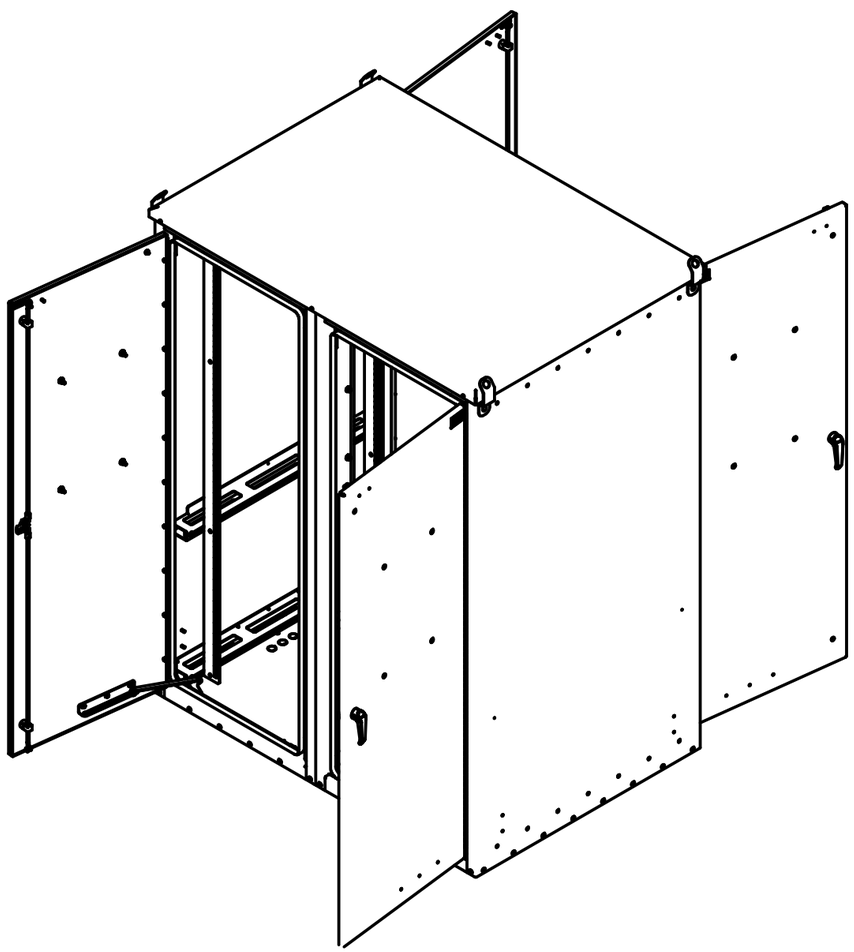

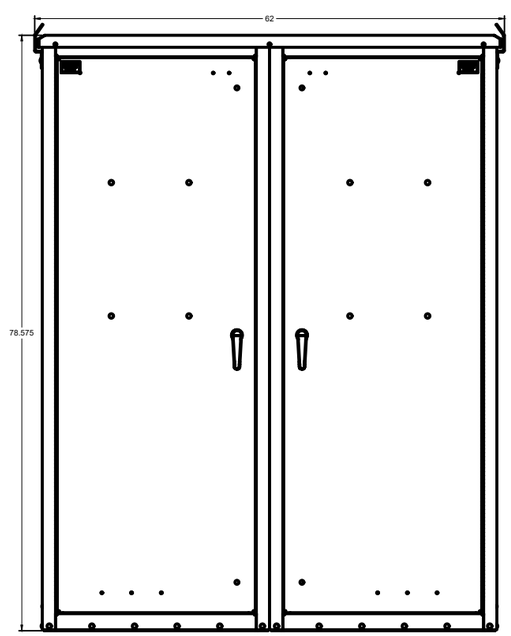

DUAL BAY CABINET
ELEVATION VIEW

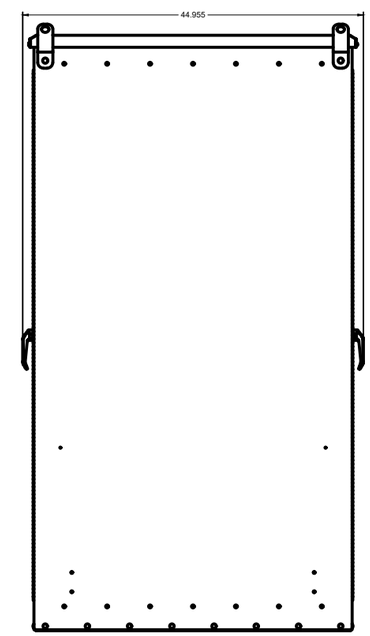

DUAL BAY CABINET
PROFILE VIEW

STATE OF TEXAS – DEPARTMENT OF TRANSPORTATION

CONSULTANT FUNCTIONAL SUPERVISOR ---

CALCULATED–DESIGNED BY T. Hammond

CHECKED BY ---

REVISED BY T. Hammond

DATE REVISED 4/10/2017 2:44 PM

DATE/TIME PLOTTED 6/8/2018 11:24 AM

FILENAME NETRMA SEGMENT 4 TOLLING DESIGN.DWG

LAST REVISION 00-00-00

BORDER LAST REVISED 06/08/2018 | RELATIVE BORDER SCALE IS IN INCHES 0 1 2 3 | UNIT --- | PROJECT NUMBER & PHASE --- | SHEET TITLE Toll Cabinet Details | SHEET NUMBER CM-002 | SCALE NTS

Dist	COUNTY	ROUTE	POST MILES TOTAL PROJECT	SHEET No.	TOTAL SHEETS
---	Smith	Toll 49	0.0 / 0.0	53	65

REGISTERED ENGINEER DATE

PLANS APPROVAL DATE

THE STATE OF TEXAS OR ITS OFFICERS OR AGENTS SHALL NOT BE RESPONSIBLE FOR THE ACCURACY OR COMPLETENESS OF SCANNED COPIES OF THIS PLAN SHEET.

Kapsch TrafficCom
211 East 7th Street, Suite 800
Austin, Texas 78701

North East Texas Regional Mobility Auth.
909 ESE Loop 323, Suite 360
Tyler, Texas 75701

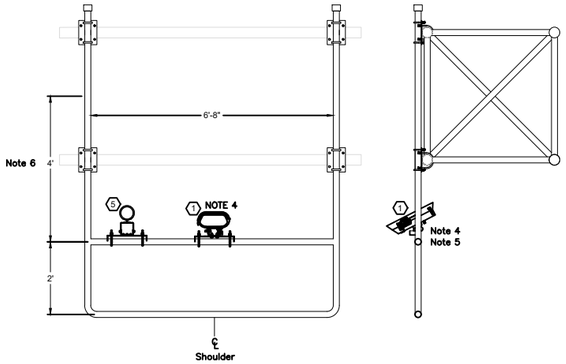

Hanger Type – A1
Elevation View

Hanger Type – A1
Profile View

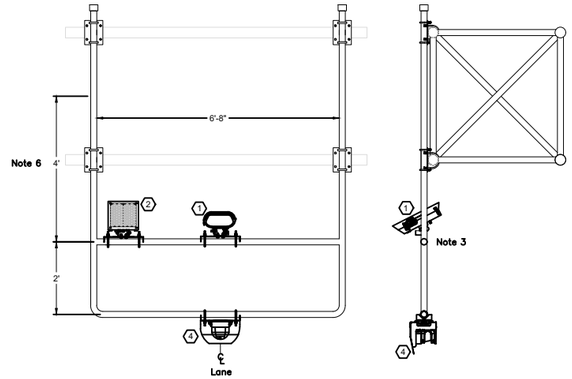

Hanger Type – A2
Elevation View

Hanger Type – A2
Profile View

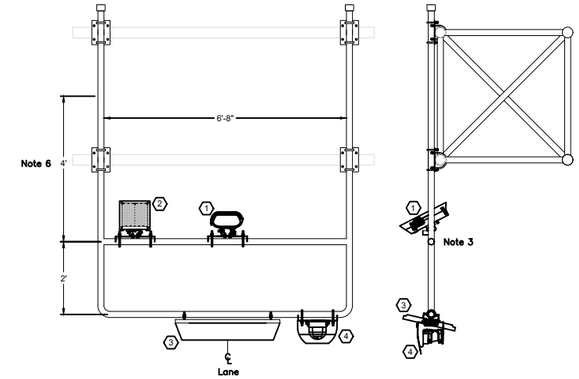

Hanger Type – A3
Elevation View

Hanger Type – A3
Profile View

EQUIPMENT WEIGHTS - TYPE A1					
ITEM # ⬡	COMPONENT	COMP. WT. (lbs.)	BRACKET WT. (lbs.)	HANGER QTY.	GANTRY WT. (lbs.)
1	VES Camera	21.7	3.5	1	25.2
2	VES Strobe	13.0	3.5	0	0.0
3	AVI Antenna	19.0	0.0	0	0.0
4	AVDC Scanner	8.2	5	0	0.0
5	DVAS Camera	5.5	3.5	1	9.0
6	Hanger	100.0	0.0	1	100.0
TOTAL COMPONENT WEIGHT PER LANE					134.2

EQUIPMENT WEIGHTS - TYPE A2					
ITEM # ⬡	COMPONENT	COMP. WT. (lbs.)	BRACKET WT. (lbs.)	HANGER QTY.	GANTRY WT. (lbs.)
1	VES Camera	21.7	3.5	1	25.2
2	VES Strobe	13.0	3.5	1	16.5
3	AVI Antenna	19.0	0.0	0	0.0
4	AVDC Scanner	8.2	5	1	13.2
5	DVAS Camera	5.5	3.5	0	0.0
6	Hanger	100.0	0.0	1	100.0
TOTAL COMPONENT WEIGHT PER LANE					154.9

EQUIPMENT WEIGHTS - TYPE A3					
ITEM # ⬡	COMPONENT	COMP. WT. (lbs.)	BRACKET WT. (lbs.)	HANGER QTY.	GANTRY WT. (lbs.)
1	VES Camera	21.7	3.5	1	25.2
2	VES Strobe	13.0	3.5	1	16.5
3	AVI Antenna	19.0	0.0	1	19.0
4	AVDC Scanner	8.2	5	1	13.2
5	DVAS Camera	5.5	3.5	0	0.0
6	Hanger	100.0	0.0	1	100.0
TOTAL COMPONENT WEIGHT PER LANE					173.9

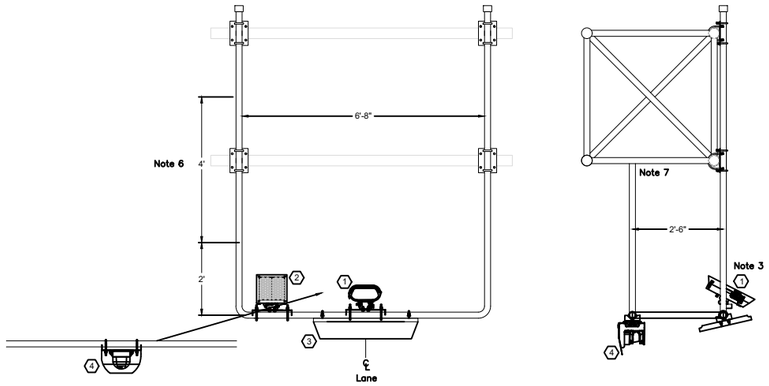

Hanger Type – A4
Elevation View

Hanger Type – A4
Profile View

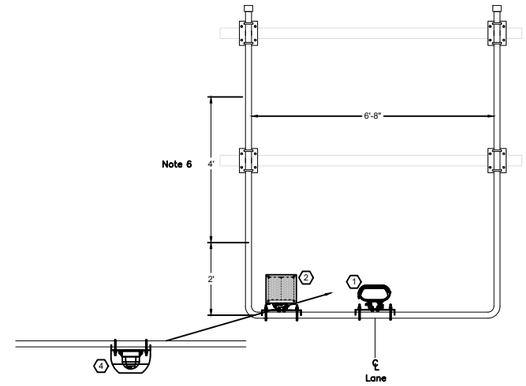

Hanger Type – A5
Elevation View

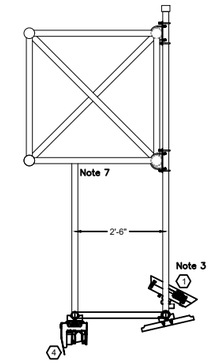

Hanger Type – A5
Profile View

NOTES:

1. Component locations are subject to change due to site surveys, gantry locations and hanger design.
2. DVAS cameras will be placed and aimed appropriately by installation technicians.
3. VES strobe not shown in this view.
4. Shoulder camera consists of a housing only.
5. DVAS camera not shown in this view.
6. Distance varies from 4'–0" to 6'–0".

EQUIPMENT WEIGHTS - TYPE A4					
ITEM # ⬡	COMPONENT	COMP. WT. (lbs.)	BRACKET WT. (lbs.)	HANGER QTY.	GANTRY WT. (lbs.)
1	VES Camera	21.7	3.5	1	25.2
2	VES Strobe	13.0	3.5	1	16.5
3	AVI Antenna	19.0	0.0	1	19.0
4	AVDC Scanner	8.2	5	1	13.2
5	DVAS Camera	5.5	3.5	0	0.0
6	Hanger	100.0	0.0	1	100.0
TOTAL COMPONENT WEIGHT PER LANE					173.9

EQUIPMENT WEIGHTS - TYPE A5					
ITEM # ⬡	COMPONENT	COMP. WT. (lbs.)	BRACKET WT. (lbs.)	HANGER QTY.	GANTRY WT. (lbs.)
1	VES Camera	21.7	3.5	1	25.2
2	VES Strobe	13.0	3.5	1	16.5
3	AVI Antenna	19.0	0.0	0	0.0
4	AVDC Scanner	8.2	5	1	13.2
5	DVAS Camera	5.5	3.5	0	0.0
6	Hanger	100.0	0.0	1	100.0
TOTAL COMPONENT WEIGHT PER LANE					154.9

STATE OF TEXAS – DEPARTMENT OF TRANSPORTATION

CONSULTANT FUNCTIONAL SUPERVISOR ---

CALCULATED–DESIGNED BY T. Hammond

CHECKED BY ---

REVISED BY T. Hammond

DATE REVISED 4/10/2017 2:44 PM

DATE/TIME PLOTTED 6/8/2018 11:24 AM

FILENAME NETRMA SEGMENT 4 TOLLING DESIGN.DWG

LAST REVISION 00-00-00

BORDER LAST REVISED 06/08/2018 | RELATIVE BORDER SCALE IS IN INCHES 0 1 2 3 | UNIT --- | PROJECT NUMBER & PHASE --- | SHEET TITLE Overhead Equipment Elevation Details | SHEET NUMBER CM-003 | SCALE NTS

Dist	COUNTY	ROUTE	POST MILES TOTAL PROJECT	SHEET No.	TOTAL SHEETS
---	Smith	Toll 49	0.0 / 0.0	54	65

REGISTERED ENGINEER DATE

PLANS APPROVAL DATE

THE STATE OF TEXAS OR ITS OFFICERS OR AGENTS SHALL NOT BE RESPONSIBLE FOR THE ACCURACY OR COMPLETENESS OF SCANNED COPIES OF THIS PLAN SHEET.

Kapsch TrafficCom
211 East 7th Street, Suite 800
Austin, Texas 78701

North East Texas Regional Mobility Auth.
909 ESE Loop 323, Suite 360
Tyler, Texas 75701

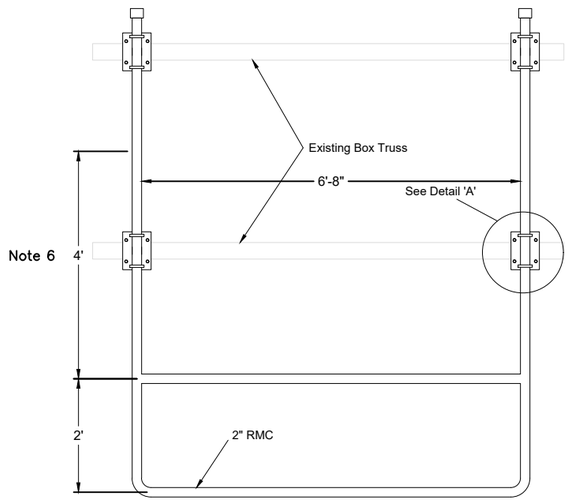

Hanger Type 1
Elevation View

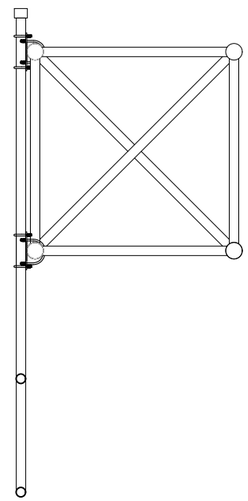

Hanger Type 1
Profile View

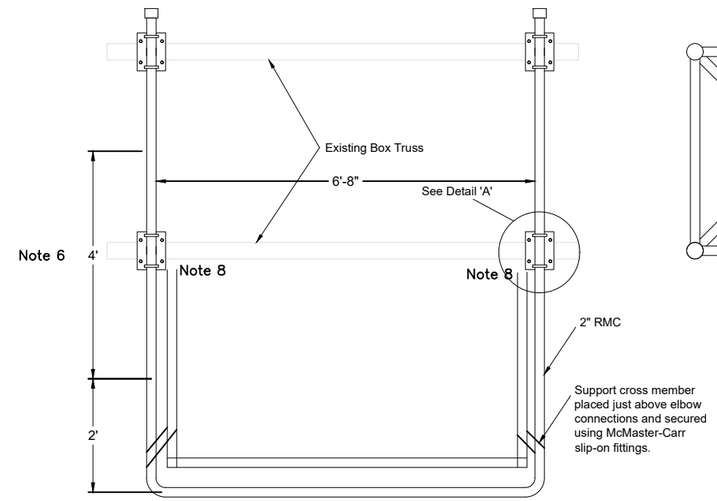

Hanger Type 2
Elevation View

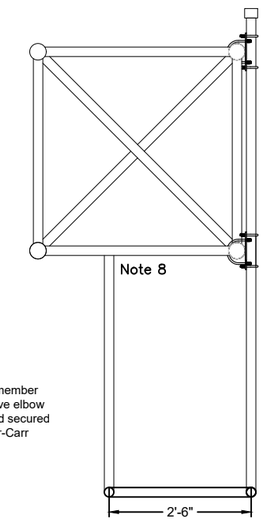

Hanger Type 2
Profile View

Notes:

1. Each truss connection consists of one ¼" steel plate, u-bolt (x4), flat washer (x8), lock washer (x8) and hex nut (x16).
2. Length of vertical component can be adjusted prior to fabrication after gantries are in place to account for local gantry height differences.
3. All hardware must be stainless steel type 316.
4. 10-foot wide hangers with connection hardware weigh approximately 150 pounds each.
5. U-bolts connected to the box truss may differ from what is shown depending on the design of the box truss horizontal member.
6. This dimension can vary from 48 inches to 72 inches.
7. All RMC connections are threaded - no welds allowed.
8. Connection of vertical support to gantry is TBD.

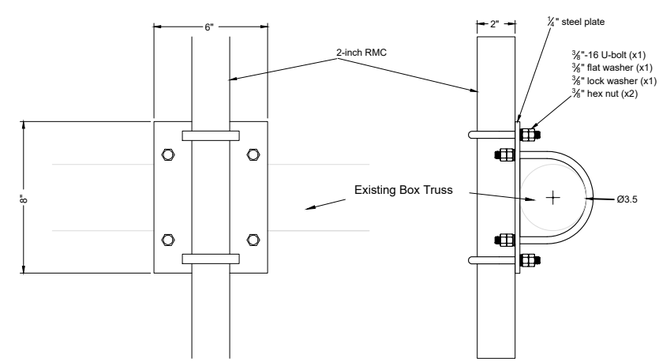

Elevation View

Profile View

Detail 'A' (x4)

STATE OF TEXAS – DEPARTMENT OF TRANSPORTATION	CONSULTANT FUNCTIONAL SUPERVISOR	CALCULATED–DESIGNED BY	T. Hammond
	---	CHECKED BY	--
		REVISED BY	T. Hammond
		DATE REVISED	4/10/2017 2:44 PM

DATE/TIME PLOTTED 6/8/2018 11:24 AM

FILENAME NETRMA SEGMENT 4 TOLLING DESIGN.DWG

LAST REVISION 00-00-00

BORDER LAST REVISED 06/08/2018 | RELATIVE BORDER SCALE IS IN INCHES 0 1 2 3 | UNIT --- | PROJECT NUMBER & PHASE --- | SHEET TITLE Equipment Hanger Details | SHEET NUMBER CM-004 | SCALE 3/8" = 1'-0"

Dist	COUNTY	ROUTE	POST MILES TOTAL PROJECT	SHEET No.	TOTAL SHEETS
---	Smith	Toll 49	0.0 / 0.0	55	65

REGISTERED ENGINEER DATE

PLANS APPROVAL DATE

THE STATE OF TEXAS OR ITS OFFICERS OR AGENTS SHALL NOT BE RESPONSIBLE FOR THE ACCURACY OR COMPLETENESS OF SCANNED COPIES OF THIS PLAN SHEET.

Kapsch TrafficCom
211 East 7th Street, Suite 800
Austin, Texas 78701

North East Texas Regional Mobility Auth.
909 ESE Loop 323, Suite 360
Tyler, Texas 75701

NOTES:

1. All dimensions shown are decimal inches.

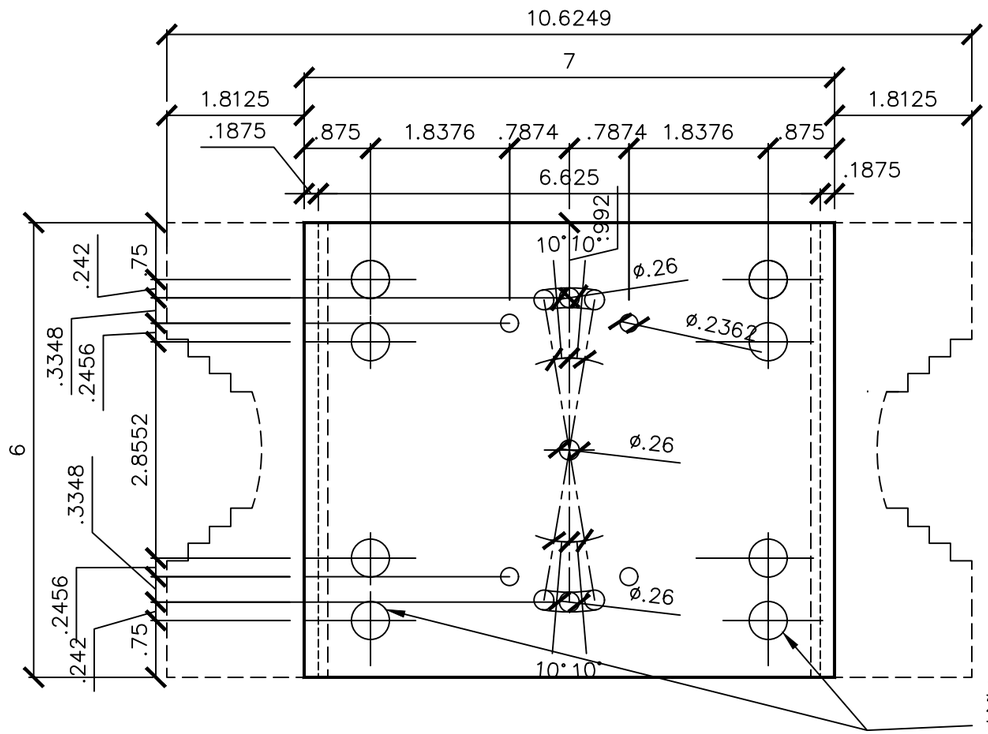

Plan View

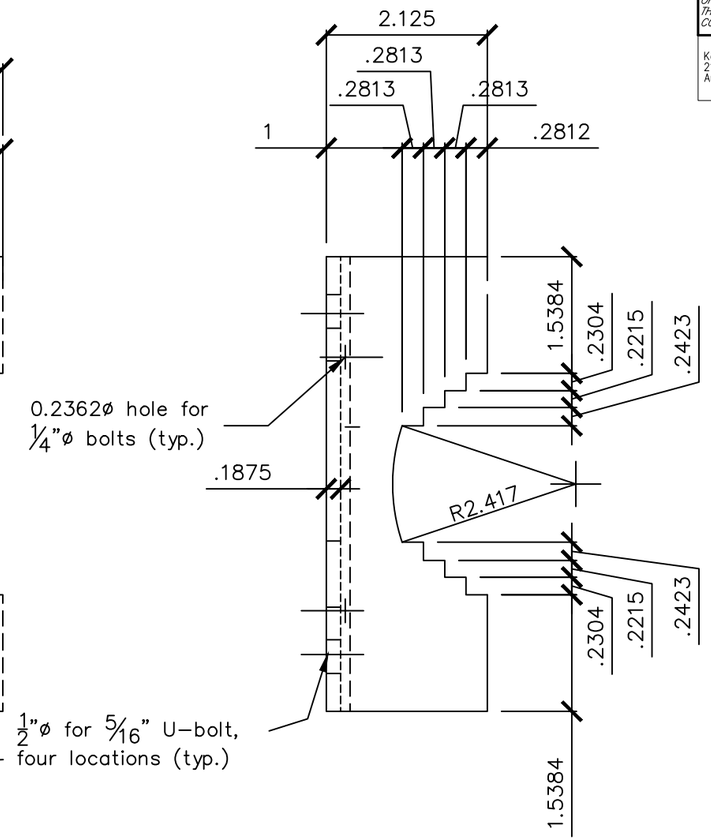

Profile View

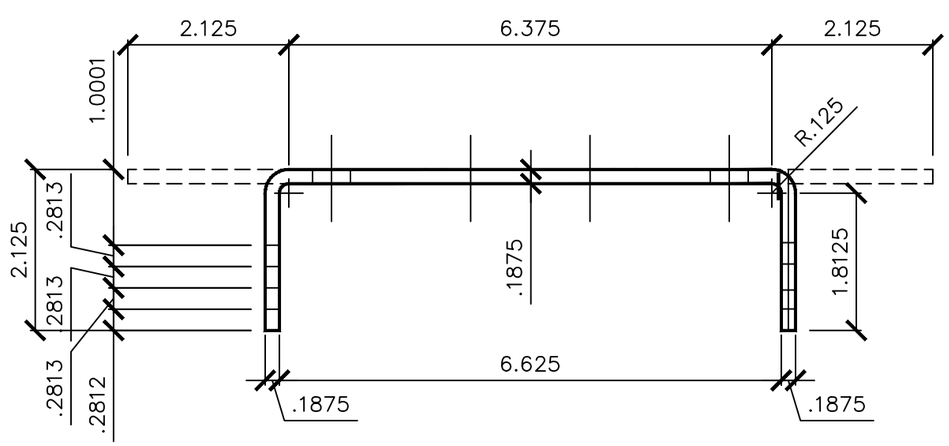

Elevation View

STATE OF TEXAS - DEPARTMENT OF TRANSPORTATION

CALCULATED-DESIGNED BY	T. Hammond	REVISED BY	T. Hammond
CHECKED BY	--	DATE REVISED	4/10/2017 2:44 PM

CONSULTANT FUNCTIONAL SUPERVISOR ---

DATE/TIME PLOTTED 6/8/2018 11:24 AM

FILENAME NETRMA SEGMENT 4 TOLLING DESIGN.DWG

LAST REVISION 00-00-00

BORDER LAST REVISED 06/08/2018 | RELATIVE BORDER SCALE IS IN INCHES 0 1 2 3 | UNIT --- | PROJECT NUMBER & PHASE --- | SHEET TITLE VES - DVAS Camera Bracket Details | SHEET NUMBER CM-005 | SCALE NTS

Dist	COUNTY	ROUTE	POST MILES TOTAL PROJECT	SHEET No.	TOTAL SHEETS
---	Smith	Toll 49	0.0 / 0.0	56	65

REGISTERED ENGINEER DATE

PLANS APPROVAL DATE

THE STATE OF TEXAS OR ITS OFFICERS OR AGENTS SHALL NOT BE RESPONSIBLE FOR THE ACCURACY OR COMPLETENESS OF SCANNED COPIES OF THIS PLAN SHEET.

Kapsch TrafficCom
211 East 7th Street, Suite 800
Austin, Texas 78701

North East Texas Regional Mobility Auth.
909 ESE Loop 323, Suite 360
Tyler, Texas 75701

NOTES:

1. All dimensions shown are decimal inches.

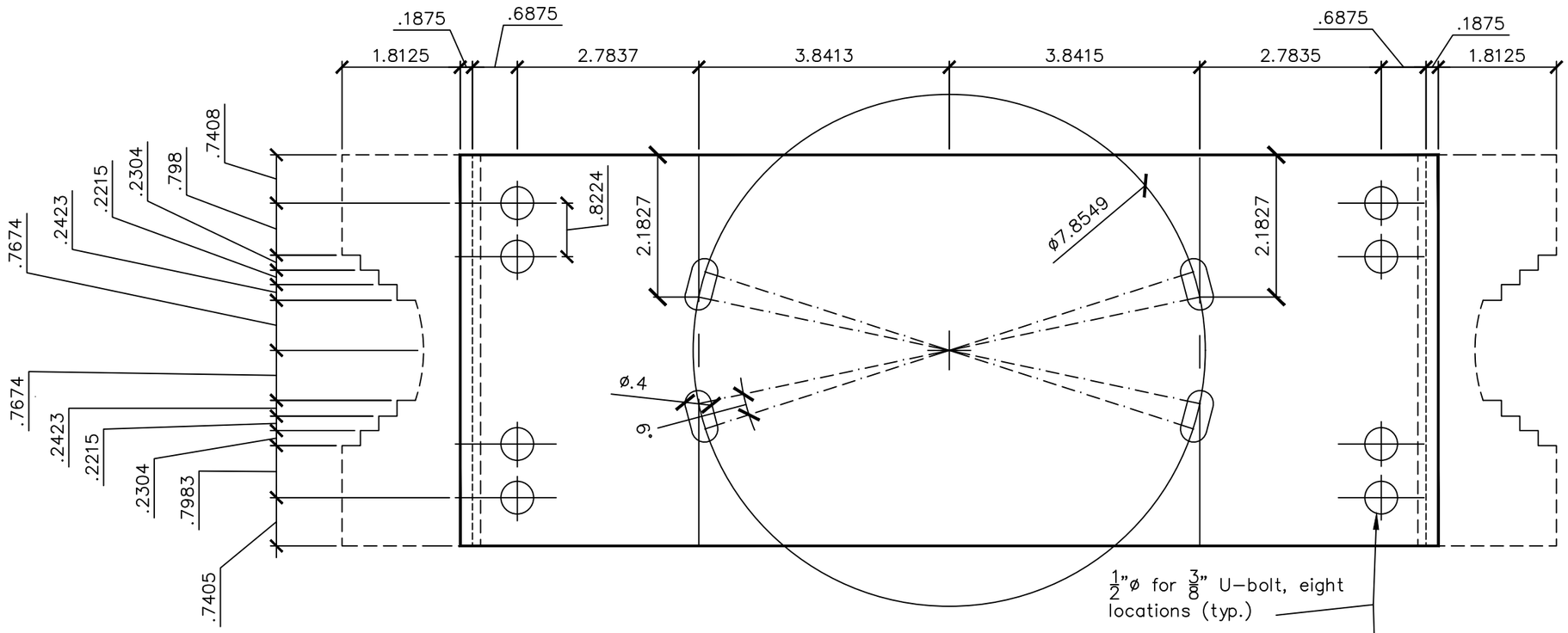

Plan View

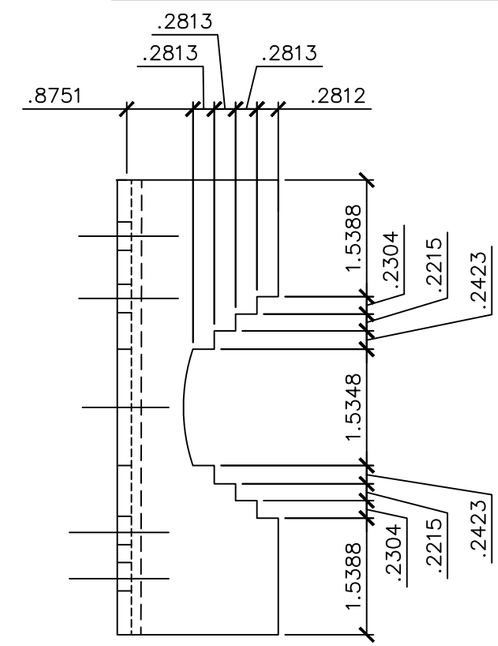

Profile View

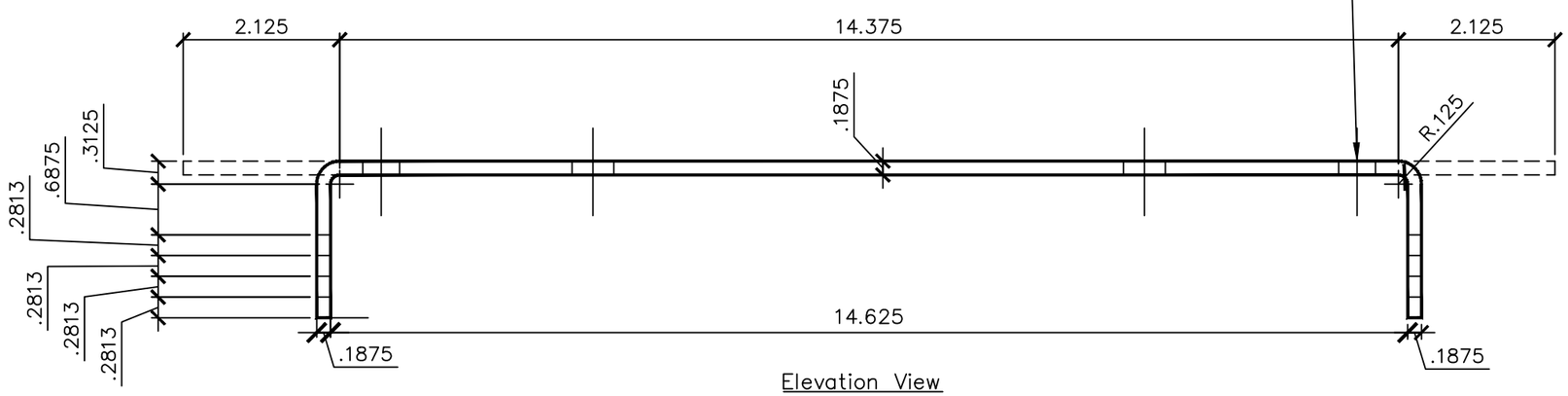

Elevation View

STATE OF TEXAS - DEPARTMENT OF TRANSPORTATION

CONSULTANT FUNCTIONAL SUPERVISOR ---

CALCULATED-DESIGNED BY T. Hammond

CHECKED BY --

REVISED BY T. Hammond

DATE REVISED 4/10/2017 2:44 PM

DATE/TIME PLOTTED 6/8/2018 11:24 AM

FILENAME NETRMA SEGMENT 4 TOLLING DESIGN.DWG

LAST REVISION 00-00-00

BORDER LAST REVISED 06/08/2018 | RELATIVE BORDER SCALE IS IN INCHES 0 1 2 3 | UNIT --- | PROJECT NUMBER & PHASE --- | SHEET TITLE AVDC Scanner Bracket Details | SHEET NUMBER CM-006 | SCALE 6" = 1'-0"

Dist	COUNTY	ROUTE	POST MILES TOTAL PROJECT	SHEET No.	TOTAL SHEETS
---	Smith	Toll 49	0.0 / 0.0	57	65

REGISTERED ENGINEER DATE

PLANS APPROVAL DATE

THE STATE OF TEXAS OR ITS OFFICERS OR AGENTS SHALL NOT BE RESPONSIBLE FOR THE ACCURACY OR COMPLETENESS OF SCANNED COPIES OF THIS PLAN SHEET.

Kapsch TrafficCom
211 East 7th Street, Suite 800
Austin, Texas 78701

North East Texas Regional Mobility Auth.
909 ESE Loop 323, Suite 360
Tyler, Texas 75701

This sheet intentionally left blank

STATE OF TEXAS - DEPARTMENT OF TRANSPORTATION	CONSULTANT FUNCTIONAL SUPERVISOR	CALCULATED-DESIGNED BY	T. Hammond	REVISED BY	T. Hammond
	---	CHECKED BY	---	DATE REVISED	4/10/2017 2:44 PM

DATE/TIME PLOTTED 6/8/2018 11:24 AM

FILENAME NETRMA SEGMENT 4 TOLLING DESIGN.DWG

LAST REVISION 00-00-00

Dist	COUNTY	ROUTE	POST MILES TOTAL PROJECT	SHEET No.	TOTAL SHEETS
---	Smith	Toll 49	0.0 / 0.0	58	65

REGISTERED ENGINEER DATE

PLANS APPROVAL DATE

THE STATE OF TEXAS OR ITS OFFICERS OR AGENTS SHALL NOT BE RESPONSIBLE FOR THE ACCURACY OR COMPLETENESS OF SCANNED COPIES OF THIS PLAN SHEET.

Kapsch TrafficCom
211 East 7th Street, Suite 800
Austin, Texas 78701

North East Texas Regional Mobility Auth.
909 ESE Loop 323, Suite 360
Tyler, Texas 75701

NOTES:

1. See gantry elevation detail for detailed location of equipment on toll hangers. relative to other equipment.
2. A ttach strobe to camera bracket using four M5x16 bolts, four M5 lock washers, four M5 flat washers and four M5 nuts.
3. Attach the camera bracket (with strobe attached) on the 2-inch pipe using the U-bolt, washers, lock washers and nuts per Detail A. Ensure that the camera bracket is approximately horizontal.
4. Route the strobe trigger cable (not shown) to camera in accordance with field wiring drawings.
5. Align the camera enclosure mounting surface with the hole pattern of the pan/tilt/roll VIS-CAM mount and secure it to the camera mount with the five JAI-provided $\frac{1}{4}$"-20 cap screws.
6. Remove yaw/roll lower bracket assembly-not needed in this installation.
7. Attach the VIS-CAM mount (with attached camera enclosure) to camera bracket using $\frac{1}{4}$"-20 cap screws, flat washers on either side of camera bracket, spring washers and double hex nuts.
8. Attach the camera to the internal camera/lens mount and install in the camera enclosure.
9. Attach the camera bracket (with camera attached) on the 2-inch pipe using the U-bolt, washers, spring washers and double hex nuts per Detail A. Ensure that the camera bracket is approximately horizontal.
10. Route the camera end of the cable and the camera-strobe cable (not shown) according to local electrical code requirements to the camera and strobe housings. terminate cable in accordance with field wiring drawings.
11. Align the strobe and camera angles in accordance with JAI installation procedures to ensure that the image and illumination are pointed at the trigger point and adjust the focus of the camera on the trigger point.

ITEM #	QTY REQ'D	PART #	DESCRIPTION	MANUFACTURER
1	0	92235A210	Flanged socket head screw, M5 x 12 mm	McMaster-Carr
2	8	92153A422	Split lock washer, M5	McMaster-Carr
3	8	90965A160	Flat washer, M5	McMaster-Carr
4	16	94150A340	Hex nut, M5	McMaster-Carr
5	0	96654A135	Thread-Locking Shoulder Screw, 6mm Diameter 4mm Long Shoulder, M5 x 0.8mm Thread	McMaster-Carr
6	8	92235A212	Flanged socket head screw, M5 x 16 mm	McMaster-Carr
7	8	92147A031	Type 316 Stainless Steel Split Lock Washer, 3/8" Screw Size, 0.385" ID, 0.680" OD	McMaster-Carr
8	8	90107A127	Type 316 Stainless Steel Flat Washer, 3/8" Screw Size, 0.406" ID, 0.750" OD	McMaster-Carr
9	16	94804A320	Type 316 Stainless Steel Hex Nut, 3/8"-16 Thread Size, 9/16" Wide, 21/64" High	McMaster-Carr
10	4	11632-06398	Type 316 Stainless Steel U-Bolt, 3/8"-16 Thread Size, 2-1/2" ID, 2" Pipe Size, 3" thread length	FASTENAL
11	0	93680A325	T-Handle Push-Button Quick Release Pin, M8 x 65, Stainless steel	McMaster-Carr
12	0	95390A318	Cotter Ring, 2 x 25mm, Stainless steel	McMaster-Carr
13	0	30345T514	18-8 Stainless Steel Wire Rope Lanyard - Not for Lifting, 8-inch length	McMaster-Carr
14	1	BRKT-CAMERA	Camera Bracket	AMTEX
15	0	CUSTOM	Illuminator Threaded Mounting Bar	AMTEX
16	0	30022670000	VRX / nVDC Quick Release Bracket	AMTEX
17	0	76000062060	3mm Universal Bracket	AMTEX
18	0	30031712000B	3mm Mounting Frame, Illuminator	AMTEX
19	1	VARIES	Traffic night flash with 6FT cable, TNL-50 LED	JAI
20	1	VARIES	Camera assembly VIS-1000 AIO, PTR bracket, 14-50mm lens	JAI

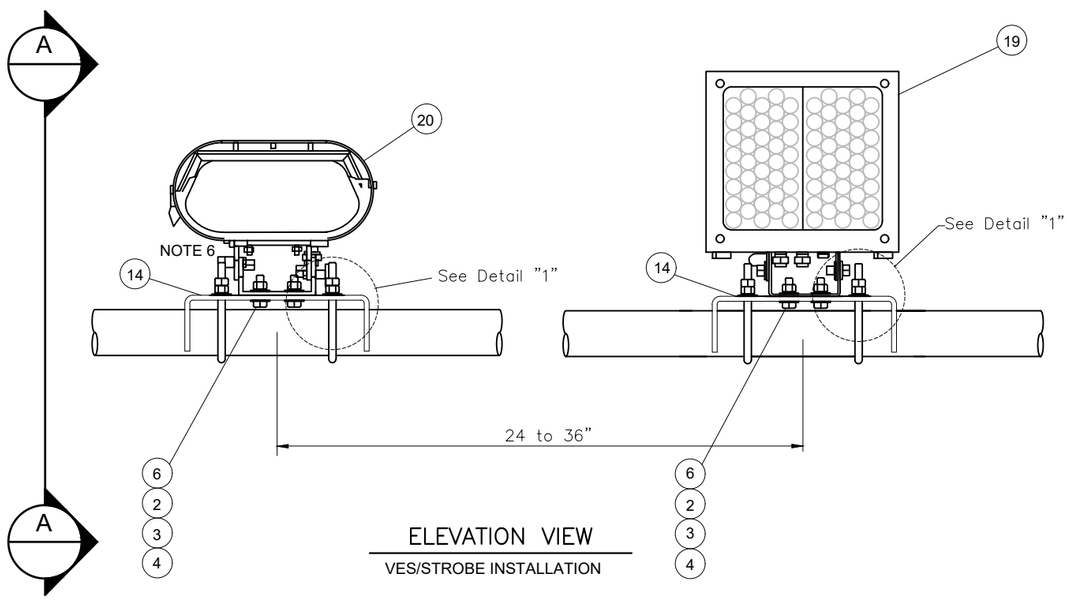

ELEVATION VIEW
VES/STROBE INSTALLATION

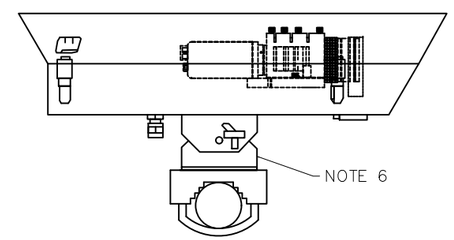

SECTION A
VES CAMERA MOUNTED TO PIPE

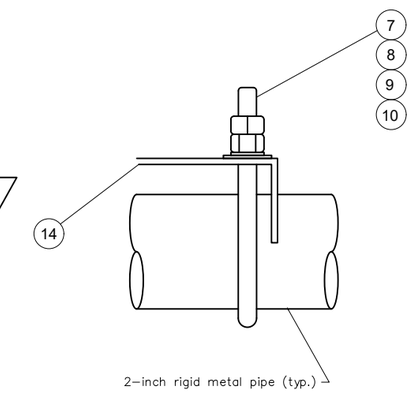

DETAIL 1
U-BOLT CONNECTION TO BRACKET

STATE OF TEXAS - DEPARTMENT OF TRANSPORTATION

CONSULTANT FUNCTIONAL SUPERVISOR ---

CALCULATED-DESIGNED BY T. Hammond

CHECKED BY --

REVISED BY T. Hammond

DATE REVISED 4/10/2017 2:44 PM

DATE/TIME PLOTTED 6/8/2018 11:24 AM

FILENAME NETRMA SEGMENT 4 TOLLING DESIGN.DWG

LAST REVISION 00-00-00

BORDER LAST REVISED 06/08/2018 | RELATIVE BORDER SCALE IS IN INCHES 0 1 2 3 | UNIT --- | PROJECT NUMBER & PHASE --- | SHEET TITLE VES Camera-Strobe Mounting Details | SHEET NUMBER CM-008 | SCALE NTS

Dist	COUNTY	ROUTE	POST MILES TOTAL PROJECT	SHEET No.	TOTAL SHEETS
---	Smith	Toll 49	0.0 / 0.0	59	65

REGISTERED ENGINEER DATE

PLANS APPROVAL DATE

THE STATE OF TEXAS OR ITS OFFICERS OR AGENTS SHALL NOT BE RESPONSIBLE FOR THE ACCURACY OR COMPLETENESS OF SCANNED COPIES OF THIS PLAN SHEET.

Kapsch TrafficCom
211 East 7th Street, Suite 800
Austin, Texas 78701

North East Texas Regional Mobility Auth.
909 ESE Loop 323, Suite 360
Tyler, Texas 75701

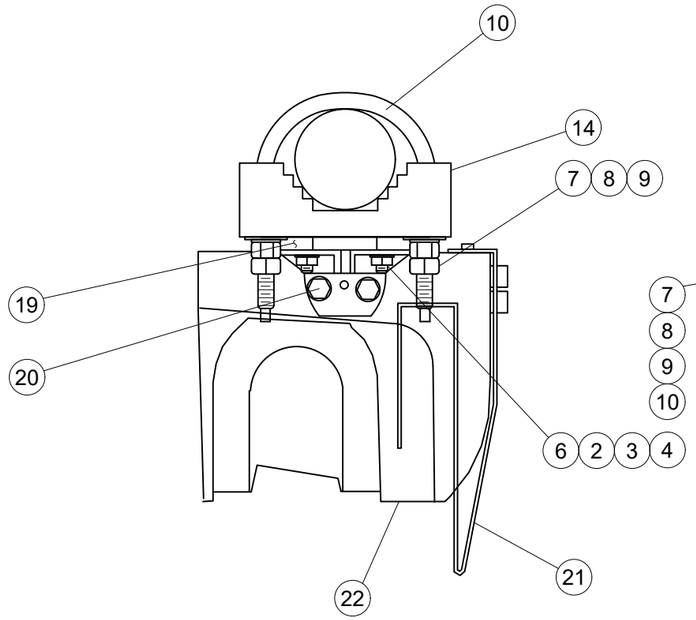

SECTION A

MOUNTED TO PIPE

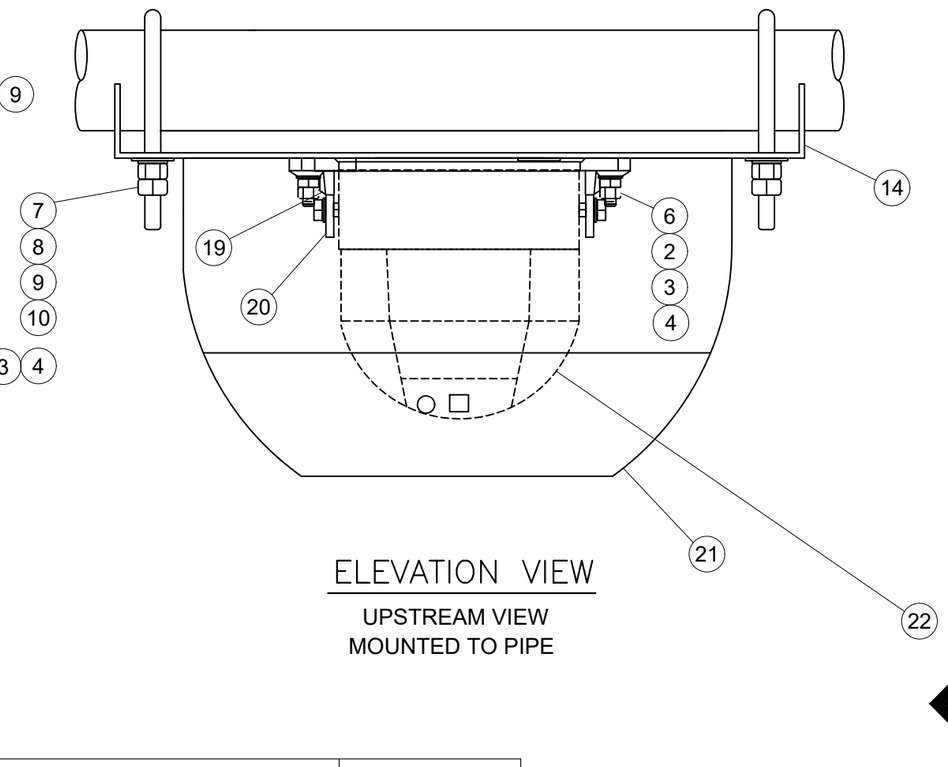

ELEVATION VIEW

UPSTREAM VIEW
MOUNTED TO PIPE

ITEM #	QTY REQ'D	PART #	DESCRIPTION	MANUFACTURER
1	0	92235A210	Flanged socket head screw, M5 x 12 mm	McMaster-Carr
2	4	92153A422	Split lock washer, M5	McMaster-Carr
3	4	90965A160	Flat washer, M5	McMaster-Carr
4	4	94150A340	Hex nut, M5	McMaster-Carr
5	0	96654A135	Thread-Locking Shoulder Screw, 6mm Diameter 4mm Long Shoulder, M5 x 0.8mm Thread	McMaster-Carr
6	4	92235A212	Flanged socket head screw, M5 x 16 mm	McMaster-Carr
7	4	92147A031	Type 316 Stainless Steel Split Lock Washer, 3/8" Screw Size, 0.385" ID, 0.680" OD	McMaster-Carr
8	4	90107A127	Type 316 Stainless Steel Flat Washer, 3/8" Screw Size, 0.406" ID, 0.750" OD	McMaster-Carr
9	8	94804A320	Type 316 Stainless Steel Hex Nut, 3/8"-16 Thread Size, 9/16" Wide, 21/64" High	McMaster-Carr
10	2	11632-06398	Type 316 Stainless Steel U-Bolt, 3/8"-16 Thread Size, 2-1/2" ID, 2" Pipe Size, 3" thread length	FASTENAL
11	0	93680A325	T-Handle Push-Button Quick Release Pin, M8 x 65, Stainless steel	McMaster-Carr
12	0	95390A318	Cotter Ring, 2 x 25mm, Stainless steel	McMaster-Carr
13	0	30345T514	18-8 Stainless Steel Wire Rope Lanyard - Not for Lifting, 8-inch length	McMaster-Carr
14	1	BRKT-SCANNER	Bracket, pipe mounting, scanner	AMTEX
15	0	CUSTOM	Sensor Threaded Mounting Bar	AMTEX
16	0	30022670000	VRX / nVDC Quick Release Bracket	AMTEX
17	0	76000062060	3mm Universal Bracket	AMTEX
18	0	30031712000B	3mm Mounting Frame, Sensor	AMTEX
19	1	2015624	Mounting kit #2	SICK
20	1	2015623	Mounting kit #1	SICK
21	1	2056850	LMS511 protection hood	SICK
22	1	1069807	LMS 511 outdoor LMS, with heater	SICK

NOTES:

1. See toll system plan view drawing for approximate position relative to other toll system components.
2. Attach mounting kit #1 to base of scanner using four M8-9 bolts included in kit.
3. Attach mounting kit #2 to scanner and mounting kit #1 using four M8 bolts included in kit.
4. Install dust prevention shield on the base of the scanner to prevent dust and condensation on the front window of the scanner. Use four M6-8 bolts included in kit.
5. Attach scanner and mounting kits to scanner bracket using four M5-16 flanged socket head screws, four M5 lock washers, four M5 flat washers and four M5 hex nuts. Dust prevention shield should face towards oncoming traffic.
6. Attach scanner bracket to mounting pipe using two U-bolts with flat washers, spring washers and double hex nuts. Leave loose for alignment.
7. Ensure that the centerline of the trigger scanner's beam is aligned correctly on the pavement of the travel lanes relative to the VES camera trigger point. Tighten lock in accordance with manufacturer's instructions.

STATE OF TEXAS - DEPARTMENT OF TRANSPORTATION

CONSULTANT FUNCTIONAL SUPERVISOR ---

CALCULATED-DESIGNED BY T. Hammond

CHECKED BY --

REVISED BY T. Hammond

DATE REVISED 4/10/2017 2:44 PM

DATE/TIME PLOTTED 6/8/2018 11:24 AM

FILENAME NETRMA SEGMENT 4 TOLLING DESIGN.DWG

LAST REVISION 00-00-00

BORDER LAST REVISED 06/08/2018 | RELATIVE BORDER SCALE IS IN INCHES 0 1 2 3 | UNIT --- | PROJECT NUMBER & PHASE --- | SHEET TITLE AVDC Scanner Mounting Details | SHEET NUMBER CM-009 | SCALE NTS

Dist	COUNTY	ROUTE	POST MILES TOTAL PROJECT	SHEET No.	TOTAL SHEETS
---	Smith	Toll 49	0.0 / 0.0	60	65

REGISTERED ENGINEER DATE

PLANS APPROVAL DATE

THE STATE OF TEXAS OR ITS OFFICERS OR AGENTS SHALL NOT BE RESPONSIBLE FOR THE ACCURACY OR COMPLETENESS OF SCANNED COPIES OF THIS PLAN SHEET.

Kapsch TrafficCom
211 East 7th Street, Suite 800
Austin, Texas 78701

North East Texas Regional Mobility Auth.
909 ESE Loop 323, Suite 360
Tyler, Texas 75701

NOTES:

1. See toll system plan view drawing for approximate position relative to other toll system components.
2. DVAS camera wiring (not shown) to be routed in accordance with local electrical codes and terminated in accordance with field wiring drawings.
3. Field drill holes for the cohu-supplied camera mounting bracket onto the kapsch-fabricated camera bracket, if necessary.
4. Mount the DVAS camera to the DVAS mounting bracket using hardware provided (two screws/washers) with camera/mount.
5. Mount the DVAS mounting bracket to the camera bracket using four M5x16 hex bolts, M5 washers, M5 lock washers and M5 nuts.
6. Attach the camera bracket (with DVAS camera/mount attached) on the 2" pipe using the U-bolts, washers, lock washers and double nuts as shown in Detail A.
7. Align the camera angles and adjust the camera focus and zoom as directed by the engineer/technician in the field.

ITEM #	QTY REQ'D	PART #	DESCRIPTION	MANUFACTURER
1	0	92235A210	Flanged socket head screw, M5 x 12 mm	McMaster-Carr
2	4	92153A422	Split lock washer, M5	McMaster-Carr
3	4	90965A160	Flat washer, M5	McMaster-Carr
4	4	94150A340	Hex nut, M5	McMaster-Carr
5	0	96654A135	Thread-Locking Shoulder Screw, 6mm Diameter 4mm Long Shoulder, M5 x 0.8mm Thread	McMaster-Carr
6	4	92235A212	Flanged socket head screw, M5 x 16 mm	McMaster-Carr
7	4	92147A031	Type 316 Stainless Steel Split Lock Washer, 3/8" Screw Size, 0.385" ID, 0.680" OD	McMaster-Carr
8	4	90107A127	Type 316 Stainless Steel Flat Washer, 3/8" Screw Size, 0.406" ID, 0.750" OD	McMaster-Carr
9	8	94804A320	Type 316 Stainless Steel Hex Nut, 3/8"-16 Thread Size, 9/16" Wide, 21/64" High	McMaster-Carr
10	2	11632-06398	Type 316 Stainless Steel U-Bolt, 3/8"-16 Thread Size, 2-1/2" ID, 2" Pipe Size, 3" thread length	FASTENAL
11	0	93680A325	T-Handle Push-Button Quick Release Pin, M8 x 65, Stainless steel	McMaster-Carr
12	0	95390A318	Cotter Ring, 2 x 25mm, Stainless steel	McMaster-Carr
13	0	30345T514	18-8 Stainless Steel Wire Rope Lanyard - Not for Lifting, 8-inch length	McMaster-Carr
14	1	BRKT-CAMERA	Camera Bracket	AMTEX
15	0	CUSTOM	Sensor Threaded Mounting Bar	AMTEX
16	0	30022670000	VRX / nVDC Quick Release Bracket	AMTEX
17	0	76000062060	3mm Universal Bracket	AMTEX
18	0	30031712000B	3mm Mounting Frame, Sensor	AMTEX
19	1	7412011-001	3430HD wall mount bracket	COHU
20	1	3432-2000	3430HD Series IP67 H.264 fixed camera system	COHU

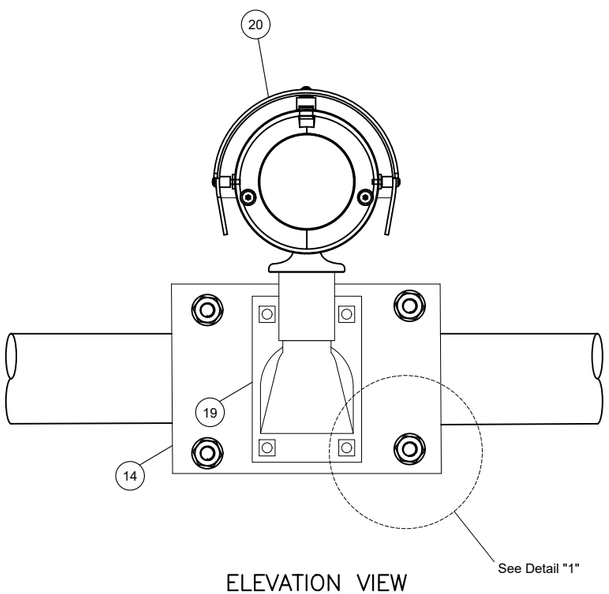

ELEVATION VIEW

DVAS INSTALLATION

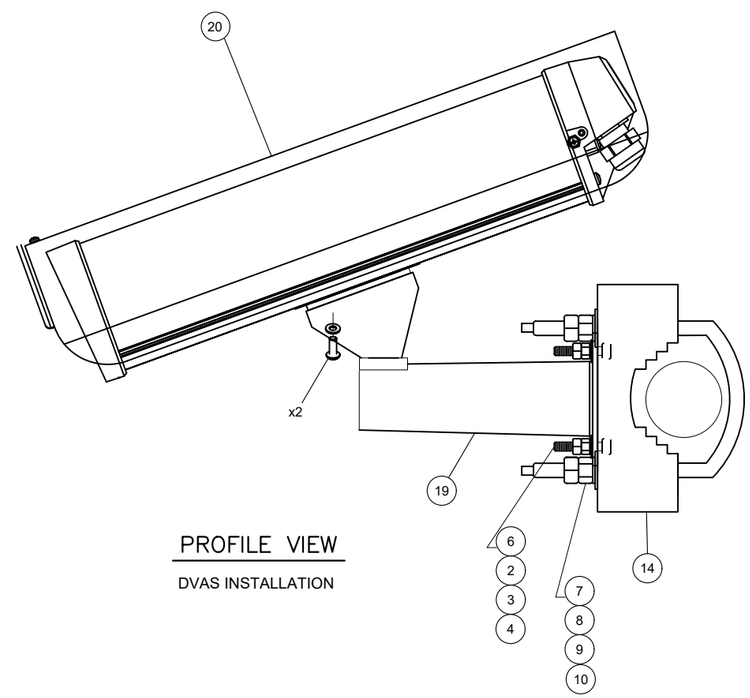

PROFILE VIEW

DVAS INSTALLATION

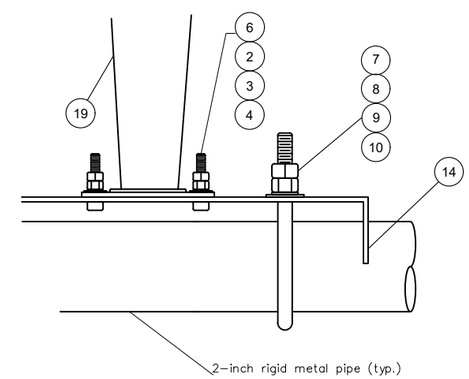

DETAIL 1

U-BOLT CONNECTION TO BRACKET

STATE OF TEXAS - DEPARTMENT OF TRANSPORTATION

CONSULTANT FUNCTIONAL SUPERVISOR ---

CALCULATED-DESIGNED BY T. Hammond

CHECKED BY ---

REVISED BY T. Hammond

DATE REVISED 4/10/2017 2:44 PM

DATE/TIME PLOTTED 6/8/2018 11:24 AM

FILENAME NETRMA SEGMENT 4 TOLLING DESIGN.DWG

LAST REVISION 00-00-00

BORDER LAST REVISED 06/08/2018 | RELATIVE BORDER SCALE IS IN INCHES 0 1 2 3 | UNIT --- | PROJECT NUMBER & PHASE --- | SHEET TITLE DVAS Camera Mounting Details | SHEET NUMBER CM-010 | SCALE NTS

Dist	COUNTY	ROUTE	POST MILES TOTAL PROJECT	SHEET No.	TOTAL SHEETS
---	Smith	Toll 49	0.0 / 0.0	61	65

REGISTERED ENGINEER DATE

PLANS APPROVAL DATE

THE STATE OF TEXAS OR ITS OFFICERS OR AGENTS SHALL NOT BE RESPONSIBLE FOR THE ACCURACY OR COMPLETENESS OF SCANNED COPIES OF THIS PLAN SHEET.

Kapsch TrafficCom
211 East 7th Street, Suite 800
Austin, Texas 78701

North East Texas Regional Mobility Auth.
909 ESE Loop 323, Suite 360
Tyler, Texas 75701

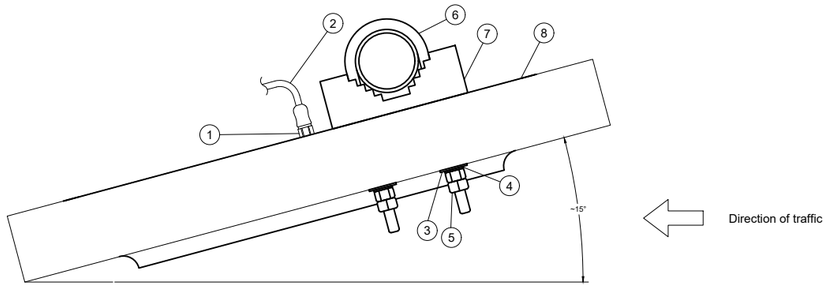

SECTION A

BASE BRACKET INSTALLATION TO ANTENNA

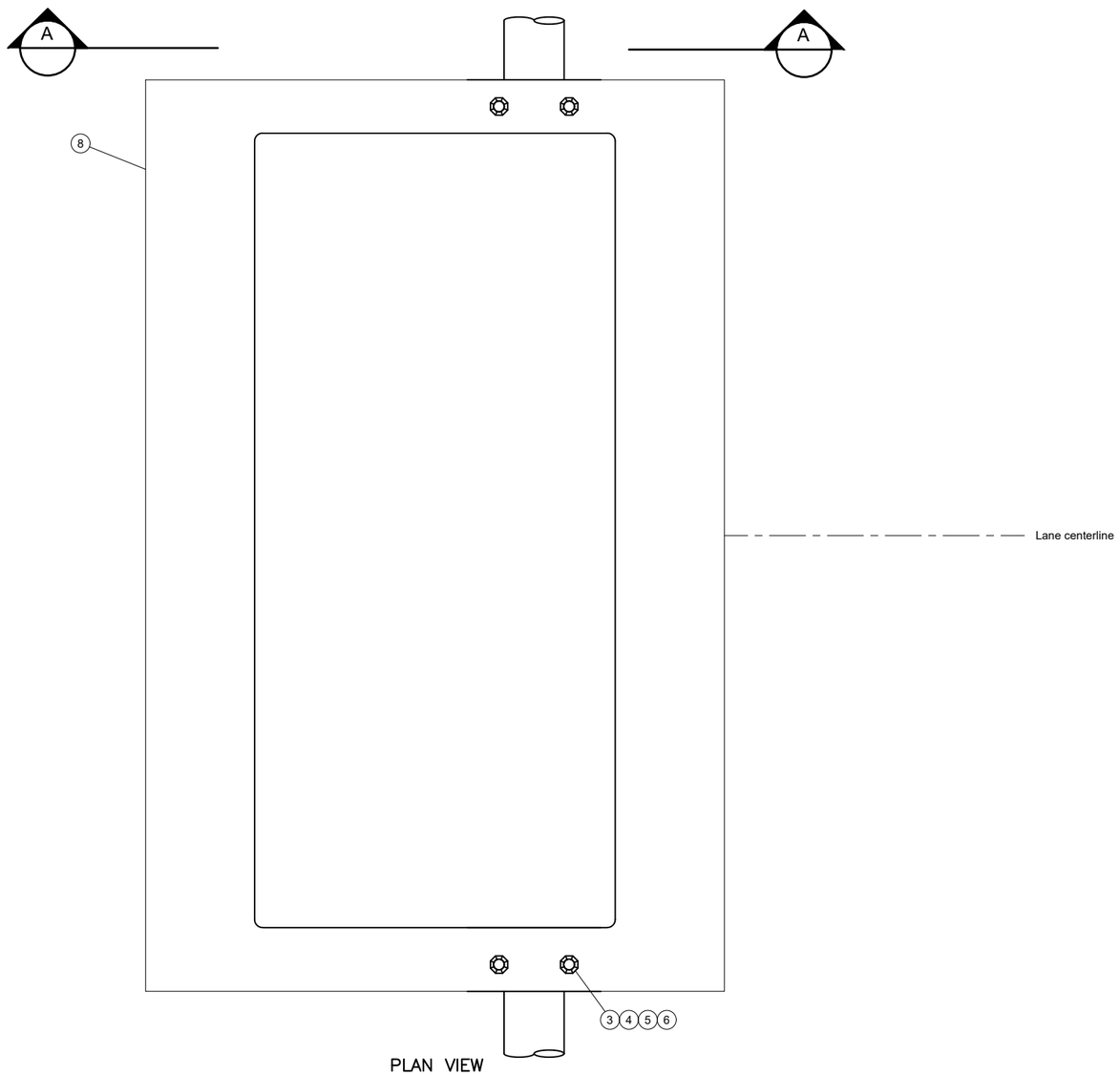

PLAN VIEW
BASE BRACKET INSTALLATION TO ANTENNA
(LOOKING UP FROM ROADWAY)

ITEM #	QTY REQ'D	PART #	DESCRIPTION	MANUFACTURER
1	8	EZ-600-NMH-D	Connector, N-type coax, 90-degree plug, male	Times Microwave
2	4	LMR-600	Coax cable	Times Microwave
3	8	NOTE 5	Flat mounting bushing	Transcore
4	4	NOTE 5	Lock washer, 1/2-inch	Transcore
5	1	NOTE 5	Hex nut, 1/2-inch	Transcore
6	1	NOTE 5	u-bolt, 1/2-inch zinc plated	Transcore
7	1	NOTE 5	Bracket, pipe mounting	Transcore
8	1	3152AA	Antenna	Transcore

NOTES:

1. Antenna mounted over center line of travel lanes. See toll system plan view drawing for approximate position relative to other toll system components.
2. Tighten the bracket using M8 spring washer, M8 nut and M8x70 bolt. Use tightening torque of 14n/m.
3. Install times microwave N-type connector (or equivalent) to coax cable and heat shrink to coax cable connector to cover the connector and the cable per manufacturer's instructions.
4. Attach N-type male terminated coax cable to antenna's N-type female connector. Use tightening torque in accordance with manufacturer's instructions.
5. Bracket, bushings, U-bolts, nuts + washers are supplied in antenna kit. Antenna manufacturer may be contacted for further details.

STATE OF TEXAS - DEPARTMENT OF TRANSPORTATION

CONSULTANT FUNCTIONAL SUPERVISOR ---

CALCULATED-DESIGNED BY T. Hammond

CHECKED BY --

REVISED BY T. Hammond

DATE REVISED 4/10/2017 2:44 PM

DATE/TIME PLOTTED 6/8/2018 11:24 AM

FILENAME NETRMA SEGMENT 4 TOLLING DESIGN.DWG

LAST REVISION 00-00-00

BORDER LAST REVISED 06/08/2018 | RELATIVE BORDER SCALE IS IN INCHES 0 1 2 3 | UNIT --- | PROJECT NUMBER & PHASE --- | SHEET TITLE AVI Antenna Mounting Details | SHEET NUMBER CM-011 | SCALE NTS

Dist	COUNTY	ROUTE	POST MILES TOTAL PROJECT	SHEET No.	TOTAL SHEETS
---	Smith	Toll 49	0.0 / 0.0	62	65

REGISTERED ENGINEER DATE

PLANS APPROVAL DATE

THE STATE OF TEXAS OR ITS OFFICERS OR AGENTS SHALL NOT BE RESPONSIBLE FOR THE ACCURACY OR COMPLETENESS OF SCANNED COPIES OF THIS PLAN SHEET.

Kapsch TrafficCom
211 East 7th Street, Suite 800
Austin, Texas 78701

North East Texas Regional Mobility Auth.
909 ESE Loop 323, Suite 360
Tyler, Texas 75701

NOTES:

1. Mounting height must be between 10'-0" and 11'-0" above grade.
2. Reader must be mounted on same column as its antenna(s).
3. Bolt reader to unistrut using 3/8-16 hardware.
4. Secure unistrut to gantry column using U-bolts or strapping.

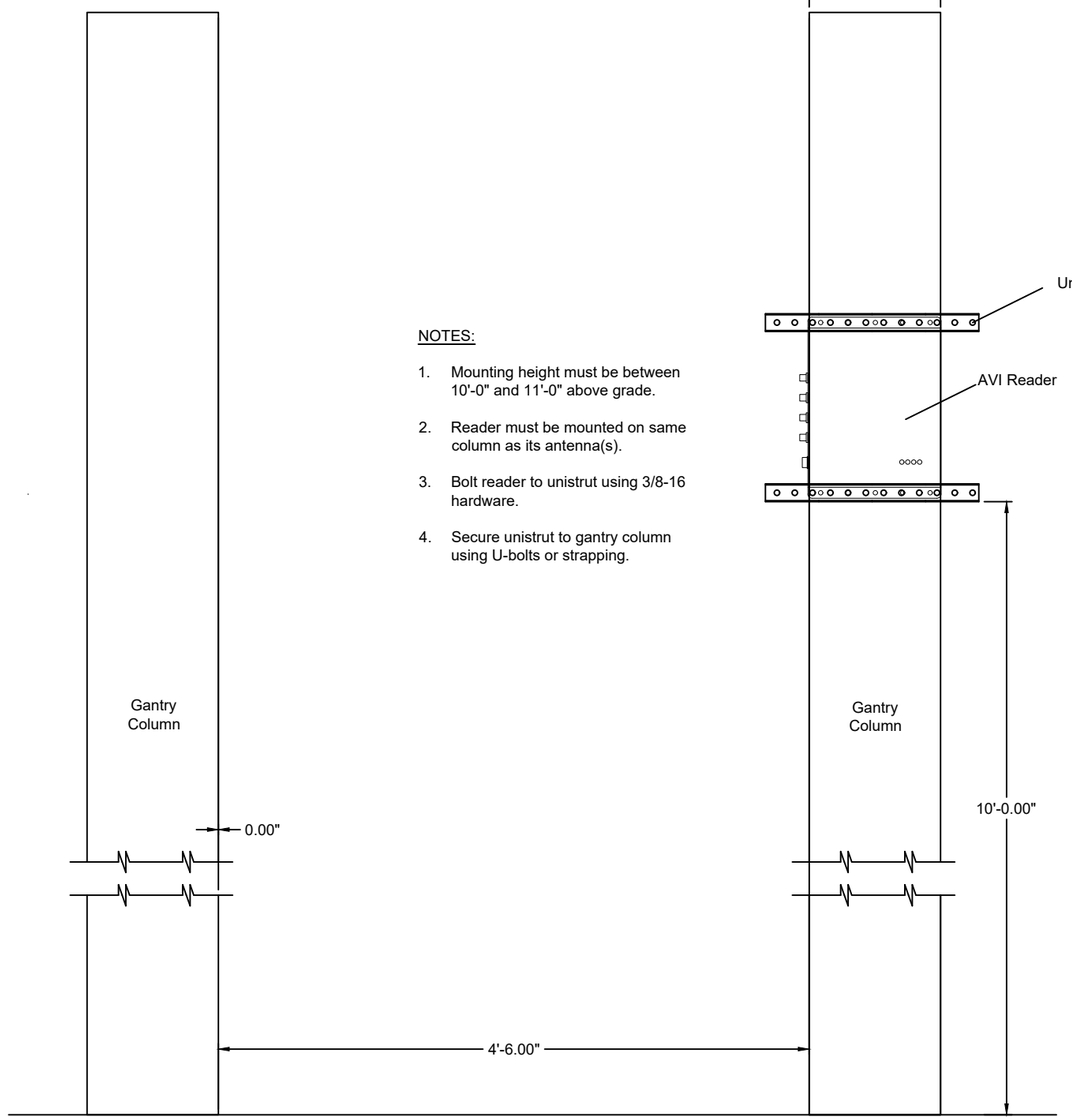

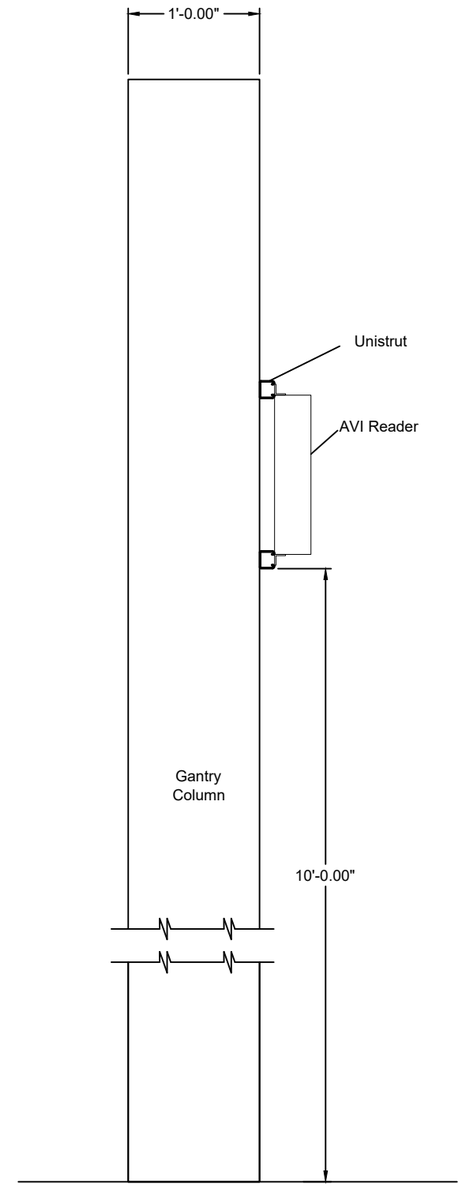

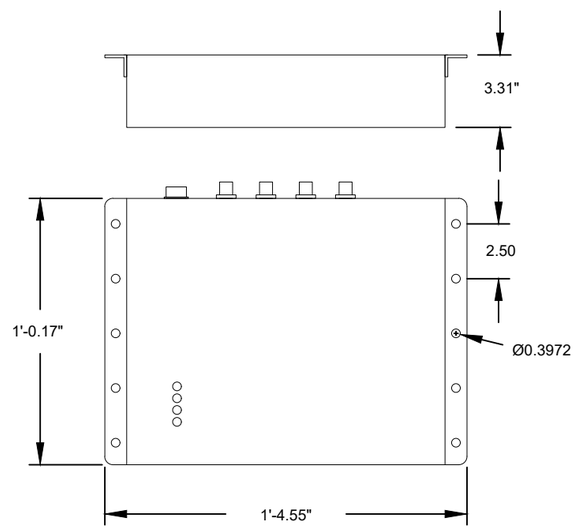

AVI Reader Dimensions
(NTS)

STATE OF TEXAS - DEPARTMENT OF TRANSPORTATION

CONSULTANT FUNCTIONAL SUPERVISOR ---

CALCULATED-DESIGNED BY T. Hammond

CHECKED BY --

REVISED BY T. Hammond

DATE REVISED 4/10/2017 2:44 PM

DATE/TIME PLOTTED 6/8/2018 11:24 AM

FILENAME NETRMA SEGMENT 4 TOLLING DESIGN.DWG

LAST REVISION 00-00-00

BORDER LAST REVISED 06/08/2018 | RELATIVE BORDER SCALE IS IN INCHES 0 1 2 3 | UNIT --- | PROJECT NUMBER & PHASE --- | SHEET TITLE AVI Reader Mounting Details | SHEET NUMBER CM-012 | SCALE NTS

Dist	COUNTY	ROUTE	POST MILES TOTAL PROJECT	SHEET No.	TOTAL SHEETS
---	Smith	Toll 49	0.0 / 0.0	63	65

REGISTERED ENGINEER DATE

PLANS APPROVAL DATE

THE STATE OF TEXAS OR ITS OFFICERS OR AGENTS SHALL NOT BE RESPONSIBLE FOR THE ACCURACY OR COMPLETENESS OF SCANNED COPIES OF THIS PLAN SHEET.

Kapsch TrafficCom
211 East 7th Street, Suite 800
Austin, Texas 78701

North East Texas Regional Mobility Auth.
909 ESE Loop 323, Suite 360
Tyler, Texas 75701

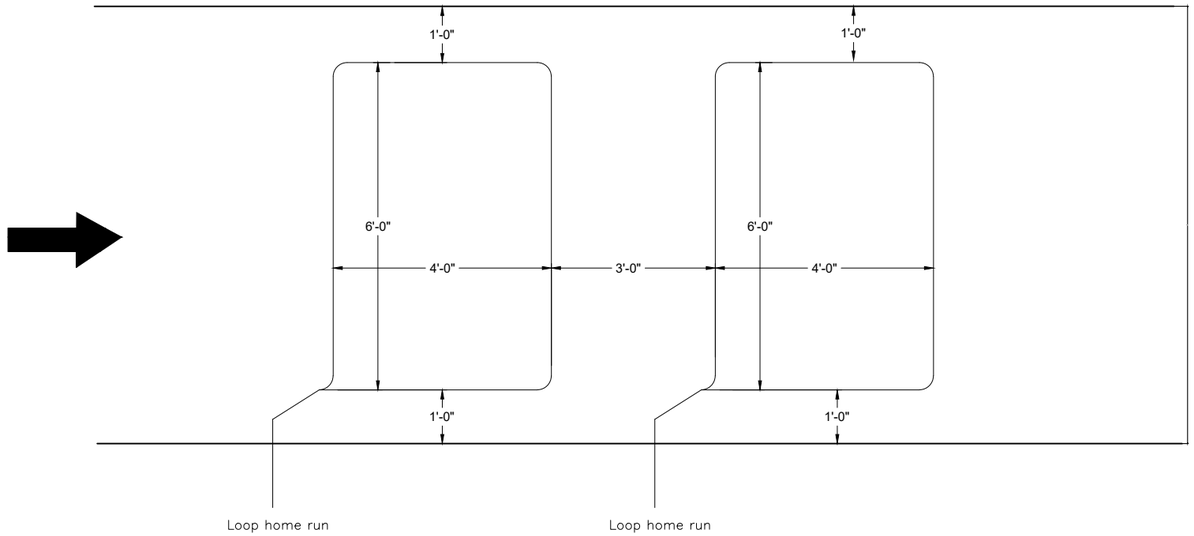

Loop Layout
Plan View

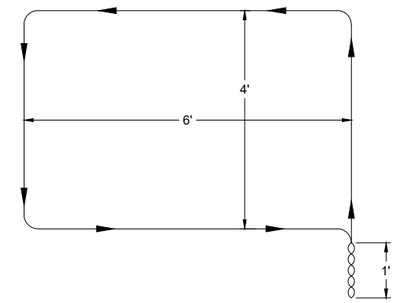

Loop Detail
Loop Placement / Saw Cut Dimensions
Plan View

Loop Detail
Loop Placement / Saw Cut Dimensions
Elevation View

INSTALLATION NOTES:

1. See loop installation guidelines for additional detail.
2. Locate risers and chip out enough concrete to access riser.
3. Saw cut loops two inches deep and 7/32" wide using wet saw in pattern shown in installation guide. Saw cut from 'start' corner to riser. Extend saw cuts far enough so they will be the proper depth for the given loop size. Drill all corners one inch in diameter to a depth of two inches.
4. Clean saw cuts. Saw cuts must be clean and dry before continuing.
5. Extend free end of loop wire the distance to the riser plus 40%. Using the spool end, begin at the start point and insert loop wire through saw cuts in a figure eight pattern shown in installation guide to complete three full figure eights. Extend the spool to the riser plus another 40%. Use four turns per loop in loop slot.
6. Twist loop wire together. Twist both the free end and the spool end until ends are completely twisted together at five twists per foot. A cordless drill helps with the twisting.
7. Test loop with loop analyzer for frequency, twist, length and resistance. Loops in same lane should produce similar readings. Individually solder each end of the loop wire lead to each end of the home run wire, twist on yellow wire nut and seal with 3M epoxy pack.
8. Fill riser with small piece of sponge and cover riser with duct seal. Fill saw cut with two-part curing sealant. Let curing sealant dry overnight and repeat if necessary.

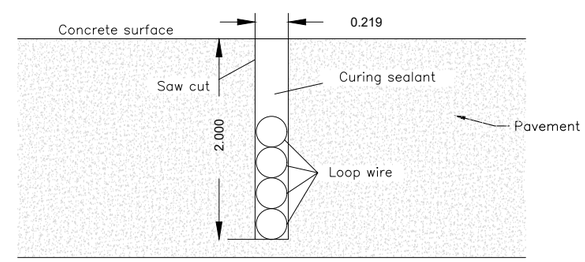

Saw cut / Loop wire
Profile View
A-A

GENERAL NOTES:

1. Loop dimensions are determined by lane width. See loop layout sheets and zone layout sheets for lane widths.
2. Loop wire is adc 8465.
3. Home run wire is Belden 3080a.
4. Jel-pack is 3M epoxy.
5. Loop sealant is Versaflex SL/75 light grey 600 ml.
6. Note that riser position may vary but the riser and start position are always co-located.
7. Loops are installed at mainlane zones in shoulders only.
8. Record loop dimensions as cut to the nearest 1/4" before filling cuts.
9. Start of loop shall always be connected to white/clear conductor of loop lead-in cable.

STATE OF TEXAS - DEPARTMENT OF TRANSPORTATION

CONSULTANT FUNCTIONAL SUPERVISOR ---

CALCULATED-DESIGNED BY T. Hammond
CHECKED BY --

REVISED BY T. Hammond
DATE REVISED 4/10/2017 2:44 PM

DATE/TIME PLOTTED 6/8/2018 11:24 AM

FILENAME NETRMA SEGMENT 4 TOLLING DESIGN.DWG

LAST REVISION 00-00-00

BORDER LAST REVISED 06/08/2018 | RELATIVE BORDER SCALE IS IN INCHES 0 1 2 3 | UNIT --- | PROJECT NUMBER & PHASE --- | SHEET TITLE AVDC Loop Installation Details | SHEET NUMBER CM-013 | SCALE NTS

Dist	COUNTY	ROUTE	POST MILES TOTAL PROJECT	SHEET No.	TOTAL SHEETS
---	Smith	Toll 49	0.0 / 0.0	64	65

REGISTERED ENGINEER DATE

PLANS APPROVAL DATE

THE STATE OF TEXAS OR ITS OFFICERS OR AGENTS SHALL NOT BE RESPONSIBLE FOR THE ACCURACY OR COMPLETENESS OF SCANNED COPIES OF THIS PLAN SHEET.

Kapsch TrafficCom
211 East 7th Street, Suite 800
Austin, Texas 78701

North East Texas Regional Mobility Auth.
909 ESE Loop 323, Suite 360
Tyler, Texas 75701

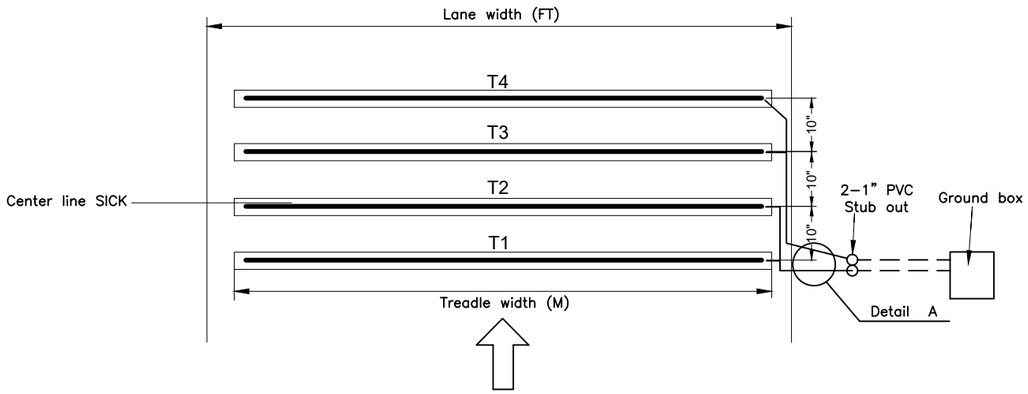

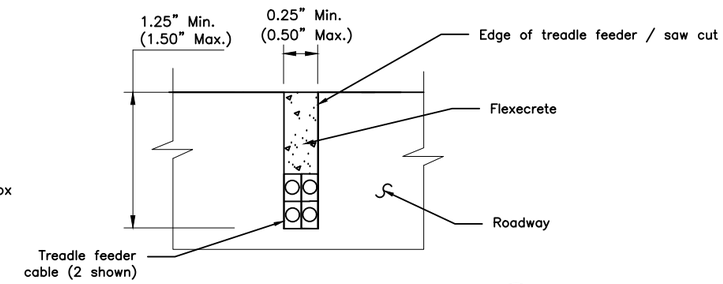

Detail A
Treadle feeder placement / Home run saw cut dimensions

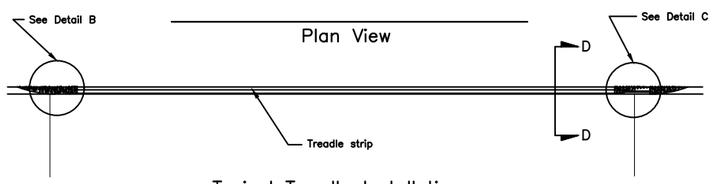

Typical Treadle Installation
Elevation View

TREADLE WIDTH DETAILS						
ZONE	LANE	LANE WIDTH (FT)	LANE WIDTH (M)	TREADLE WIDTH (FT)	TREADLE WIDTH (M)	FEEDER CABLE LENGTH (M)
Mainlane	2	12'-0"	3.7	11'-6"	3.0	100
	3	12'-0"	3.7	11'-6"	3.0	100
	4	12'-0"	3.7	11'-6"	3.0	100
NB Ramp	2	12'-0"	3.7	11'-6"	3.0	100
SB Ramp	2	12'-0"	3.7	11'-6"	3.0	100

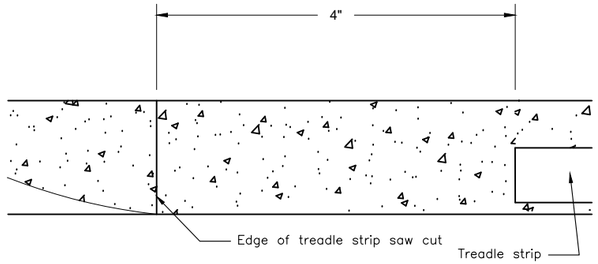

Detail B
End of treadle strip and treadle strip saw cut

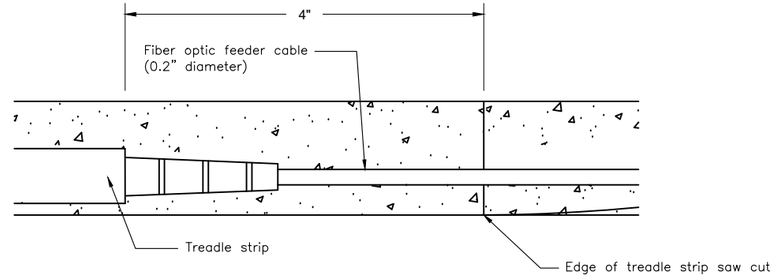

Detail C
Treadle connection

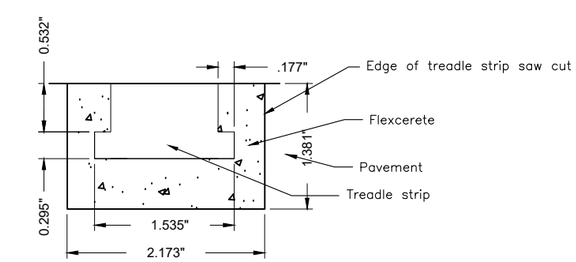

Detail D-D
Treadle strip placement / Saw cut dimensions

NOTES:

1. Center of treadle strips aligned to centerline of travel lane, 10" apart.
2. Treadle strip saw cuts to be a minimum of 2 ¼" wide x 1 ¼" deep and a maximum of 2½" wide x 1½" deep.
3. Home run saw–cuts for treadle feeder cable are to have 45 degree corners cuts. No 90 degree corners shall be used in treadle feeder home run.
4. Saw cut and area within 6" of the saw cut to be power washed and swept clean, then dried completely with compressed air before treadle strip installation begins. Area must be clean and dry to ensure flexkrete adhesion to surface.
5. In the final installed configuration, flexcrete to be flush with top of pavement.
6. All home run saw–cuts to be installed as per Detail A.

STATE OF TEXAS – DEPARTMENT OF TRANSPORTATION

CONSULTANT FUNCTIONAL SUPERVISOR ---

CALCULATED–DESIGNED BY T. Hammond | REVISED BY T. Hammond

CHECKED BY -- | DATE REVISED 4/10/2017 2:44 PM

DATE/TIME PLOTTED 6/8/2018 11:24 AM

FILENAME NETRMA SEGMENT 4 TOLLING DESIGN.DWG

LAST REVISION 00-00-00

BORDER LAST REVISED 06/08/2018 | RELATIVE BORDER SCALE IS IN INCHES 0 1 2 3 | UNIT --- | PROJECT NUMBER & PHASE --- | SHEET TITLE AVDC Treadle Installation Details | SHEET NUMBER CM-014 | SCALE NTS

Dist	COUNTY	ROUTE	POST MILES TOTAL PROJECT	SHEET No.	TOTAL SHEETS
---	Smith	Toll 49	0.0 / 0.0	65	65

REGISTERED ENGINEER DATE

PLANS APPROVAL DATE

THE STATE OF TEXAS OR ITS OFFICERS OR AGENTS SHALL NOT BE RESPONSIBLE FOR THE ACCURACY OR COMPLETENESS OF SCANNED COPIES OF THIS PLAN SHEET.

Kapsch TrafficCom
211 East 7th Street, Suite 800
Austin, Texas 78701

North East Texas Regional Mobility Auth.
909 ESE Loop 323, Suite 360
Tyler, Texas 75701

This sheet intentionally left blank

STATE OF TEXAS - DEPARTMENT OF TRANSPORTATION			
CONSULTANT FUNCTIONAL SUPERVISOR	CALCULATED-DESIGNED BY	REVISED BY	T. Hammond
---	CHECKED BY	DATE REVISED	4/10/2017 2:44 PM
	T. Hammond		

DATE/TIME PLOTTED 6/8/2018 11:24 AM

FILENAME NETRMA SEGMENT 4 TOLLING DESIGN.DWG

LAST REVISION 00-00-00

BORDER LAST REVISED 06/08/2018 | RELATIVE BORDER SCALE IS IN INCHES 0 1 2 3 | UNIT --- | PROJECT NUMBER & PHASE --- | SHEET TITLE Generator Installation Details | SHEET NUMBER CM-015 | SCALE NTS